1719AENTR

Allen-Bradley 1719 Ex I/O Ethernet/IP Adaptor

IN CABINET DISTRIBUTED IO



Component type	Fieldbus, decentr. periphery - communication module
Range	Ex I/O
Model	N/A
Product status	Existing

The Allen-Bradley Ex I/O modules are an intrinsically safe distributed I/O platform that can be mounted in either Zone 1 or 2, Class I or Div 2 hazardous areas. It integrates devices via EtherNet/IP™ in a chassis-based I/O design reducing the need for additional hardware and wiring. Allowing flexible configuration options ranging from 10 to 40-slot and covered by bulletin numbers 1718 and 1719.

COMMUNICATION	**Supporting protocol for TCP/IP**	Yes
	Supporting protocol for EtherNet/IP	Yes
	IO link master	No
CONSTRUCTION	**System accessory**	Yes
	IP rating	IP20
	Suitable for safety functions	No

Published on 16 October 2026

1719AENTR

Allen-Bradley 1719 Ex I/O Ethernet/IP Adaptor

IN CABINET DISTRIBUTED IO

Allen-Bradley

DIMENSIONAL DIAGRAM

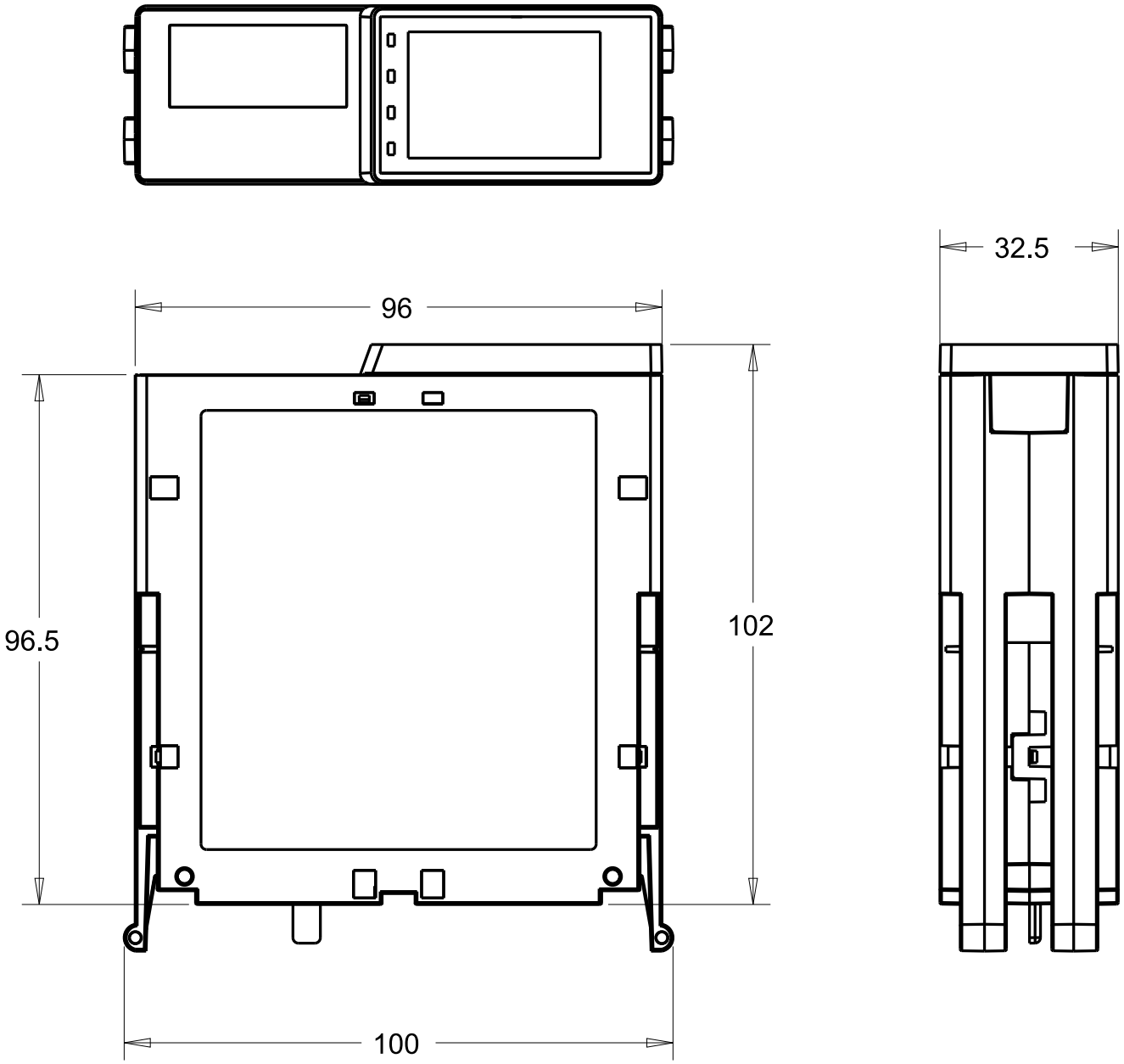

Published on 16 October 2026