843ESSIP16BA7

AB 843ES CIP Safety Ethernet/IP Encoder Single Turn Solid Shft 9.52mm Sqre Flnge 63.5mm M12 12-30VDC

SAFETY ENCODERS

Allen-Bradley



Component type	Rotary encoder
Range	843ES Encoder
Model	N/A
Product status	Existing

The Allen-Bradley 843ES Common Industrial Protocol (CIP) Safety over EtherNet/IP™ Encoders are ideal for industrial safety applications requiring speed, direction or position monitoring safety functions. Supporting safety functions in the Studio 5000 Logix Designer® application and providing auxiliary feedback via an EtherNet/IP network on CIP Safety.

ELECTRICAL	**Operating voltage at DC**	10-30
	Type of electric connection	Connector M12
COMMUNICATION	**Standard for interfaces**	Ethernet
CONSTRUCTION	**Model**	Absolute encoder
	Material housing	Aluminium
	IP rating	IP67
	Type of shaft encoder	Full shaft
	Construction size	63.5 mm
MECHANICAL	**Number of revolutions**	1
	Physical measurement principle	Optic
	Number of steps per revolution	262144
DIMENSIONS	**Diameter axle**	9.52 mm

Published on 18 August 2026

843ESSIP16BA7

AB 843ES CIP Safety Ethernet/IP Encoder Single Turn Solid Shft 9.52mm Sqre Flnge 63.5mm M12 12-30VDC

SAFETY ENCODERS

DIMENSIONAL DIAGRAM

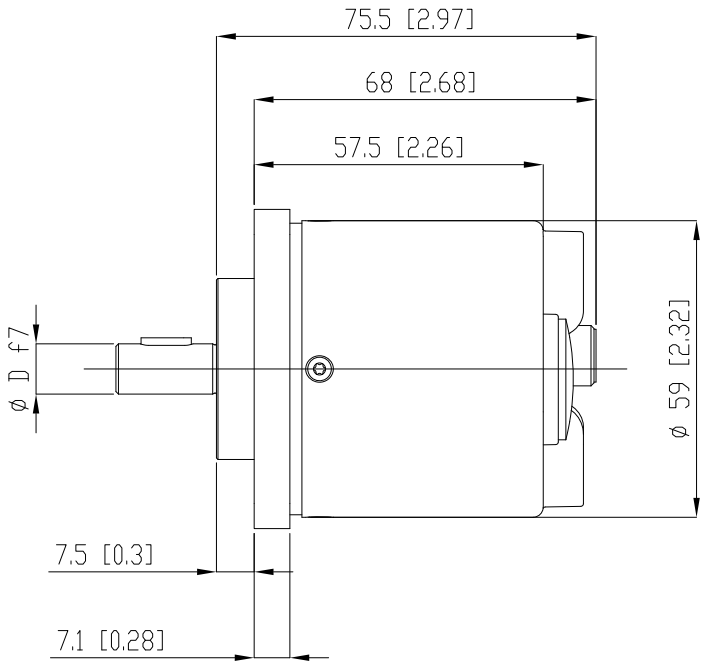

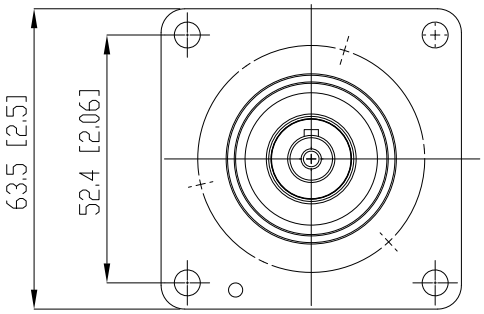

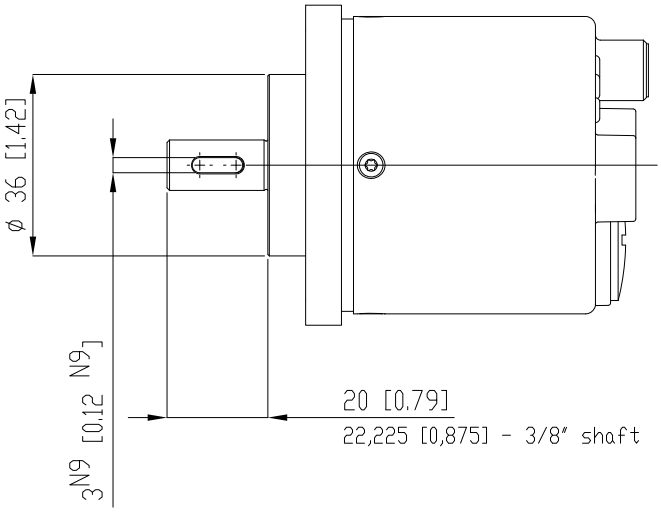

RELATED PRODUCTS

ACCESSORY

Item No: 1585DE4UBDE10

Required: No

Description: Allen-Bradley 1585 Shielded Ethernet Cable Hi Flex Pur 2 Pair CAT5e Teal M12R to M12R 10M



Item No: 1585DE4UBDE2

Required: No

Description: Allen-Bradley 1585 Shielded Ethernet Cable Hi Flex Pur 2 Pair CAT5e Teal M12R to M12R 2M

Published on 18 August 2026

RELATED PRODUCTS

ACCESSORY



Item No: 1585DE4UBDE3
Required: No
Description: Allen-Bradley 1585 Shielded Ethernet Cable Hi Flex Pur 2 Pair CAT5e Teal M12 to M12R 3M



Item No: 1585DM4UBDF10
Required: No
Description: Allen-Bradley 1585 Shielded Ethernet Cable Hi Flex Pur 2 Pair CAT5e Teal M12M to M12F 10M



Item No: 1585DM4UBDF20
Required: No
Description: Allen-Bradley 1585 Shielded Ethernet Cable Hi Flex Pur 2 Pair Teal M12M to M12F 20M

Item No: 1585DM4UBDM1
Required: No
Description: Allen-Bradley 1585 Shielded Ethernet Cable Hi Flex Pur 2 Pair Teal M12 to M12 1M

Item No: 1585DM4UBDM10
Required: No
Description: Allen-Bradley 1585 Shielded Ethernet Cable Hi Flex Pur 2 Pair Teal M12 to M12 10M

Item No: 1585DM4UBJM10
Required: No
Description: Allen-Bradley 1585 Shielded Ethernet Cable Hi Flex Pur 2 Pair Teal M12 to RJ45 10M



Item No: 1585DM4UBJM20
Required: No
Description: Allen-Bradley 1585 Shielded Ethernet Cable Hi Flex Pur 2 Pair Teal M12 to RJ45 20M

Item No: 1585DM4UBJM5
Required: No
Description: Allen-Bradley 1585 Shielded Ethernet Cable Hi Flex Pur 2 Pair Teal M12 to RJ45 5M



Item No: 889DF4EC10
Required: No
Description: AB 889D Cordset PVC Yellow 4 Pin 22AWG DC Micro Female Straight DC Micro Female Straight M12 10m



Item No: 889DF4EC2
Required: No
Description: AB 889D Cordset Cable PVC Yellow 4 Pin 22AWG DC Micro Female Straight M12 Braided Shield 2m



Item No: 889DF4EC5
Required: No
Description: AB 889D Cordset PVC Yellow 4 Pin 22AWG DC Micro Female Straight DC Micro Female Straight M12 5m



Item No: 889DF4FC10
Required: No
Description: AB 889D Cordset Cable PVC Yellow 4 Pin 22AWG DC Micro Female Straight M12 Foil Shield with Braid 10m



Item No: 889DF4FC2
Required: No
Description: AB 889D Cordset Cable PVC Yellow 4 Pin 22AWG DC Micro Female Straight M12 Foil Shield with Braid 2m



Item No: 889DF4FC5
Required: No
Description: AB 889D Cordset Cable PVC Yellow 4 Pin 22AWG DC Micro Female Straight M12 Foil Shield with Braid 5m



Item No: 889DF4FCDE2
Required: No
Description: Allen-Bradley 889D Patchcord PVC Yellow 4-pin 22 AWG DC-Micro Male/ Female 2m



Item No: 889DR4ECDE15
Required: No
Description: Allen-Bradley 889 Cable PVC Yellow 4pin Braid Dc Micro M Ra Dc Micro F Ra 15M

843ESSIP16BA7

AB 843ES CIP Safety Ethernet/IP Encoder Single Turn Solid Shft 9.52mm Sqre Flnge 63.5mm M12 12-30VDC

SAFETY ENCODERS

RELATED PRODUCTS

ACCESSORY

Item No: 889DR4FCDE15

Required: No

Description: Allen-Bradley 889 Cable PVC Yellow 4pin F Braid Dc Micro M Ra Dc Micro F Ra 15



Item No: 889DR4FCDM15

Required: No

Description: Allen-Bradley 889 Cable PVC Yellow 4pin Foil Braid Dc Micro M Dc Micro F Ra 15