SLB40003P

Socomec SLB Load Break Switch kit, w/ External Handle, 3P 4000A

LOAD BREAK SWITCHES

Component type	Switch disconnector
Range	SLB
Model	N/A
Product status	Existing

Compact switching solutions from 125A up to 5000A, the SLB range of load break switches are a proven, reliable design. Severe load duty categories (AC-22 and AC-23) are well suited to the arduous switching of motors, main switch isolation and disconnection of other loads.

ELECTRICAL

Max. rated operation voltage Ue AC	12000 V
Rated permanent current at AC-21, 400 V	3200 A
Rated uninterrupted current Iu	3200 A
Number of poles	3
Rated operation power at AC-23, 400 V	710 kW
Rated operation current Ie at AC-23a, 400 V	1250 A
Rated operation current Ie at AC-23a, 500 V	1000 A
Rated operation current Ie at AC-23a, 690 V	800 A
Rated operation current Ie at DC-23, 220 V	1250 A
Rated operation current Ie at DC-23a, 500 V	1000 A
Rated short-time withstand current Icw	110 kA
Rated insulation voltage Ui	1000 V
Rated impulse withstand voltage Uimp	12 kV
Type of control element	Long turning handle
Rated permanent current at AC-23, 400 V	1250 A
Number of auxiliary contacts as normally closed contact	0
Number of auxiliary contacts as normally open contact	0
Number of auxiliary contacts as change-over contact	0

CONSTRUCTION

Degree of protection (IP), front side	IP65
Version as main switch	Yes
Version as reversing switch	No
Number of switches	1
Suitable for front mounting 4-hole	No
Suitable for front mounting centre	No

SLB40003P

Socomec SLB Load Break Switch kit, w/ External Handle, 3P 4000A

LOAD BREAK SWITCHES

CONSTRUCTION	Suitable for distribution board installation	Yes
	Suitable for intermediate mounting	No
	Interlockable	No
MECHANICAL	Padlock locking	Yes
DIMENSIONS	Height	535 mm
	Width	470 mm
	Depth	600 mm
	Weight	90 kg

DIMENSIONAL DIAGRAM

Direct front operation

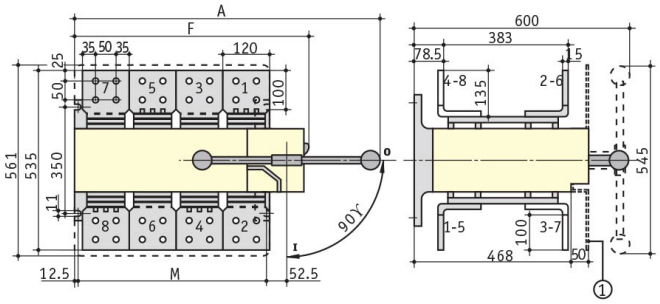

External front operation

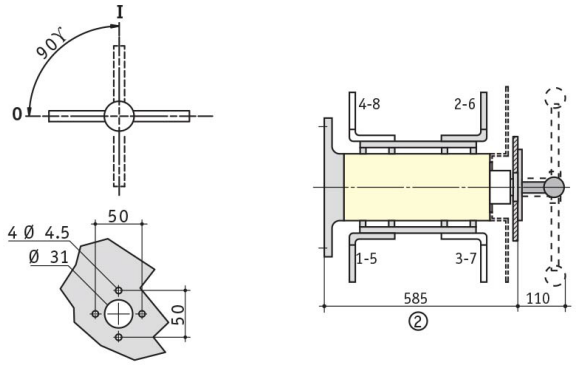

(1) **Terminal screens.**

(2) **Min. length with coupling part for shaft extension (shaft 40 mm): 635 mm.**

Rating (A)	Overall dimensions A 3p	A 4p	Switch body F 3p	F 4p	Switch mounting M 3p	M 4p
4000	684	804	470	590	347	467

Published on 24 July 2026