ISO632PGS

Socomec ISO Enclosed Isolator, IP 65 Plastic Grey, Handle - Blue, 6P 32A

ENCLOSED ISOLATORS



Component type	Switch disconnector
Range	ISO
Model	N/A
Product status	Existing

The Socomec ISO enclosed isolators deliver IP65, wall mountable, switching solutions ensuring coverage for any application. With a choice of plastic, aluminium and 316 stainless steel enclosures ranging from 25A to 250A, the range suits all environments. All handles allow for up to 3 padlocks in the OFF position and enclosure interlocking when in the ON position.

ELECTRICAL	Rated operating voltage Ue	400-690 V
	Rated uninterrupted current Iu	32 A
	Number of poles	6
	Frequency	50/60 Hz
	Rated operation current Ie at AC-23a, 690 V	13 A
	Rated short-time withstand current Icw	1.28 kA
	Rated insulation voltage Ui	690 V
	Rated impulse withstand voltage Uimp	6 kV
	Type of electrical connection of main circuit	Screw connection
	Rated operating voltage	690 V
	Number of auxiliary contacts as normally closed contact	0
	Number of auxiliary contacts as normally open contact	0
	Number of auxiliary contacts as change-over contact	0
	Motor drive integrated	No
CONSTRUCTION	Material housing	Plastic
	Colour control element	Other
	Degree of protection (IP), front side	IP65
	Degree of protection (NEMA)	4X
	Version as reversing switch	No
	Number of switches	1
	Interlockable	No
MECHANICAL	Padlock locking	Yes
DIMENSIONS	Height	176 mm
	Width	146 mm

Published on 02 November 2026

ISO632PGS

Socomec ISO Enclosed Isolator, IP 65 Plastic Grey, Handle - Blue, 6P 32A

ENCLOSED ISOLATORS

DIMENSIONS

Depth	104 mm
Weight	0.81 kg
Connectable conductor cross section	2.5-10 mm²

Published on 02 November 2026

ISO632PGS

Socomec ISO Enclosed Isolator, IP 65 Plastic Grey, Handle - Blue, 6P 32A

ENCLOSED ISOLATORS

DIMENSIONAL DIAGRAM

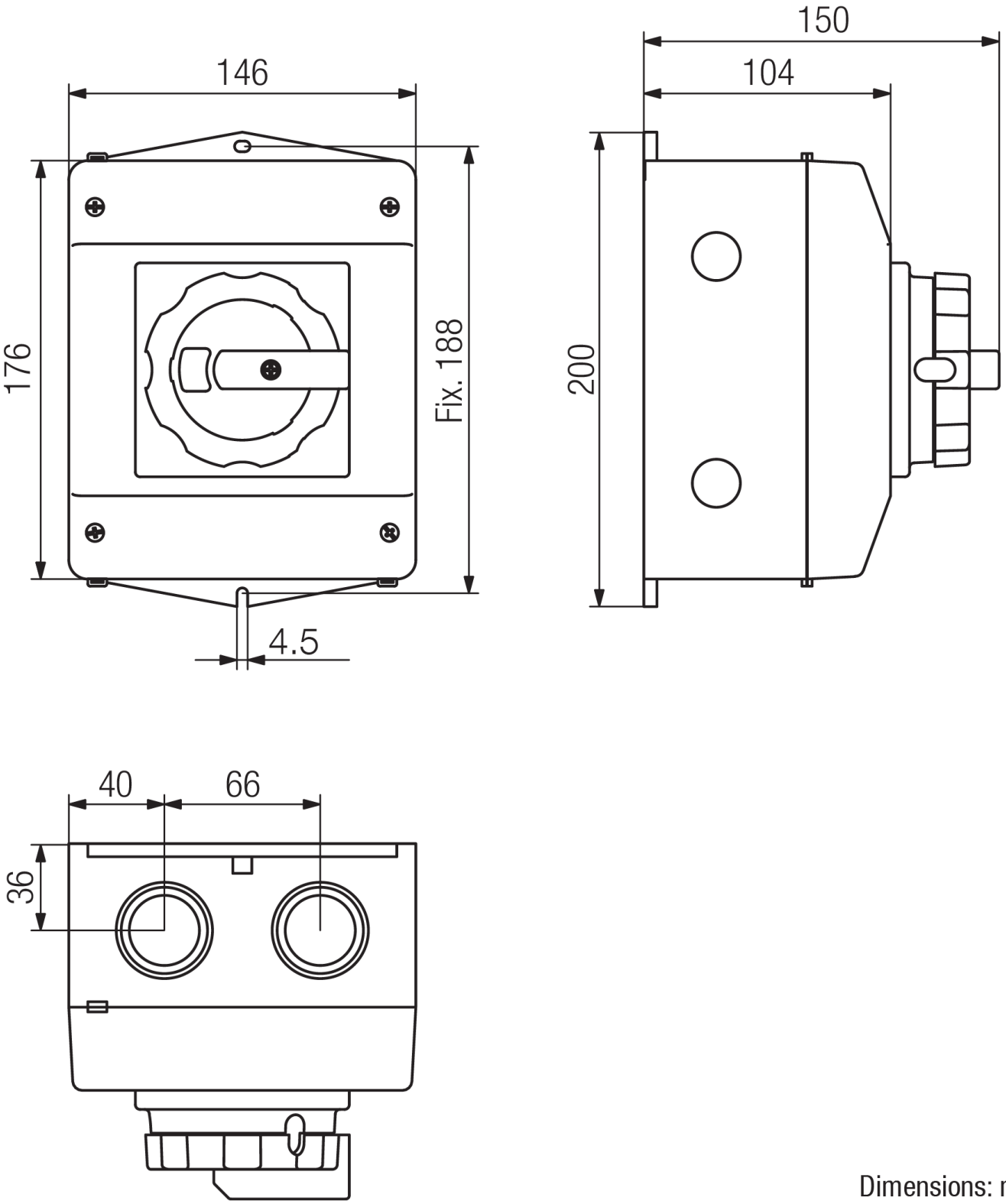

Dimensions: mm

Published on 02 November 2026

ISO632PGS

Socomec ISO Enclosed Isolator, IP 65 Plastic Grey, Handle - Blue, 6P 32A

ENCLOSED ISOLATORS

RELATED PRODUCTS

ACCESSORY



Item No: 21134001

Required: No

Description: Socomec ISO Auxiliary Contact, 1 N.O + 1 N.C, suits Plastic Enclosure 25 - 100A

Item No: 21134002

Required: No

Description: Socomec ISO Auxiliary Contact, 2 N.O + 2 N.C, suits Plastic Enclosure 25 - 100A



Item No: 21155005

Required: No

Description: Socomec ISO Neutral Pole - Unswitched (Solid), suits Plastic Enclosure 25 - 32A



Item No: 21155007

Required: No

Description: Socomec ISO Neutral Pole - Unswitched (Solid), suits Plastic Enclosure 40 - 63A

Item No: 21155009

Required: No

Description: Socomec ISO Neutral Pole - Unswitched (Solid), suits Plastic Enclosure 80A



Item No: 21155011

Required: No

Description: Socomec ISO Neutral Pole - Unswitched (Solid), suits Plastic Enclosure 100 - 125A

Item No: 21NH0302

Required: No

Description: Socomec ISO EMC Kit, suits Plastic Enclosure 40A Large - 100A