ISO4250MYS

Socomec ISO Enclosed Isolator, IP 65 Aluminium Yellow, Handle - Red, 4P 250A

ENCLOSED ISOLATORS

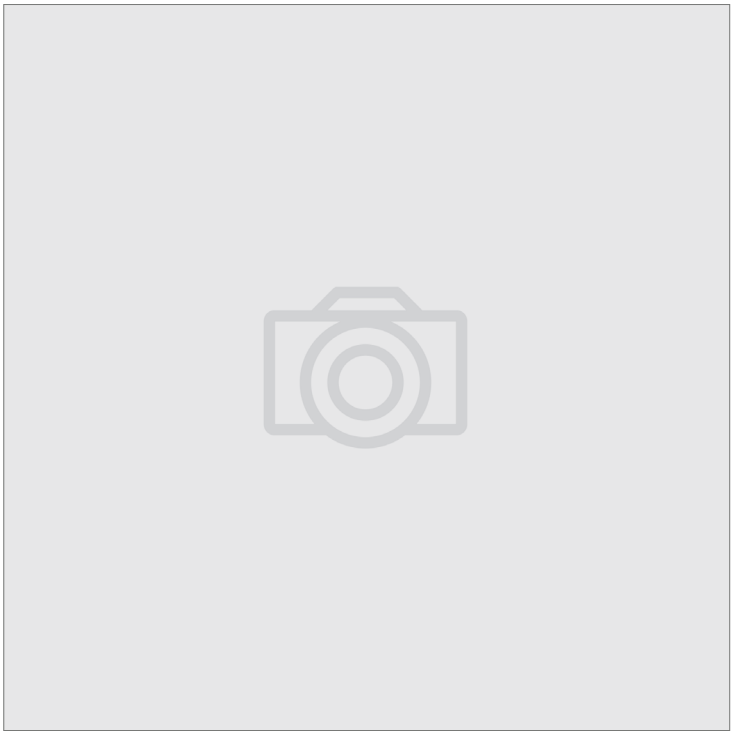

Component type	Switch disconnector
Range	ISO
Model	N/A
Product status	Existing

The Socomec ISO enclosed isolators deliver IP65, wall mountable, switching solutions ensuring coverage for any application. With a choice of plastic, aluminium and 316 stainless steel enclosures ranging from 25A to 250A, the range suits all environments. All handles allow for up to 3 padlocks in the OFF position and enclosure interlocking when in the ON position.

ELECTRICAL	**Rated uninterrupted current Iu**	250 A
	Number of poles	4
	Frequency	50/60 Hz
	Rated short-time withstand current Icw	17 kA
	Type of electrical connection of main circuit	Screw connection
	Number of auxiliary contacts as normally closed contact	0
	Number of auxiliary contacts as normally open contact	0
	Number of auxiliary contacts as change-over contact	0
	Motor drive integrated	No
CONSTRUCTION	**Colour control element**	Red
	Degree of protection (IP), front side	IP65
	Degree of protection (NEMA)	4X
	Version as reversing switch	No
	Number of switches	1
	Interlockable	No
MECHANICAL	**Padlock locking**	Yes
DIMENSIONS	**Height**	500 mm
	Width	350 mm
	Depth	213 mm
	Weight	2 kg
	Connectable conductor cross section	95-150 mm²

Published on 02 November 2026

ISO4250MYS

Socomec ISO Enclosed Isolator, IP 65 Aluminium Yellow, Handle - Red, 4P 250A

ENCLOSED ISOLATORS

DIMENSIONAL DIAGRAM

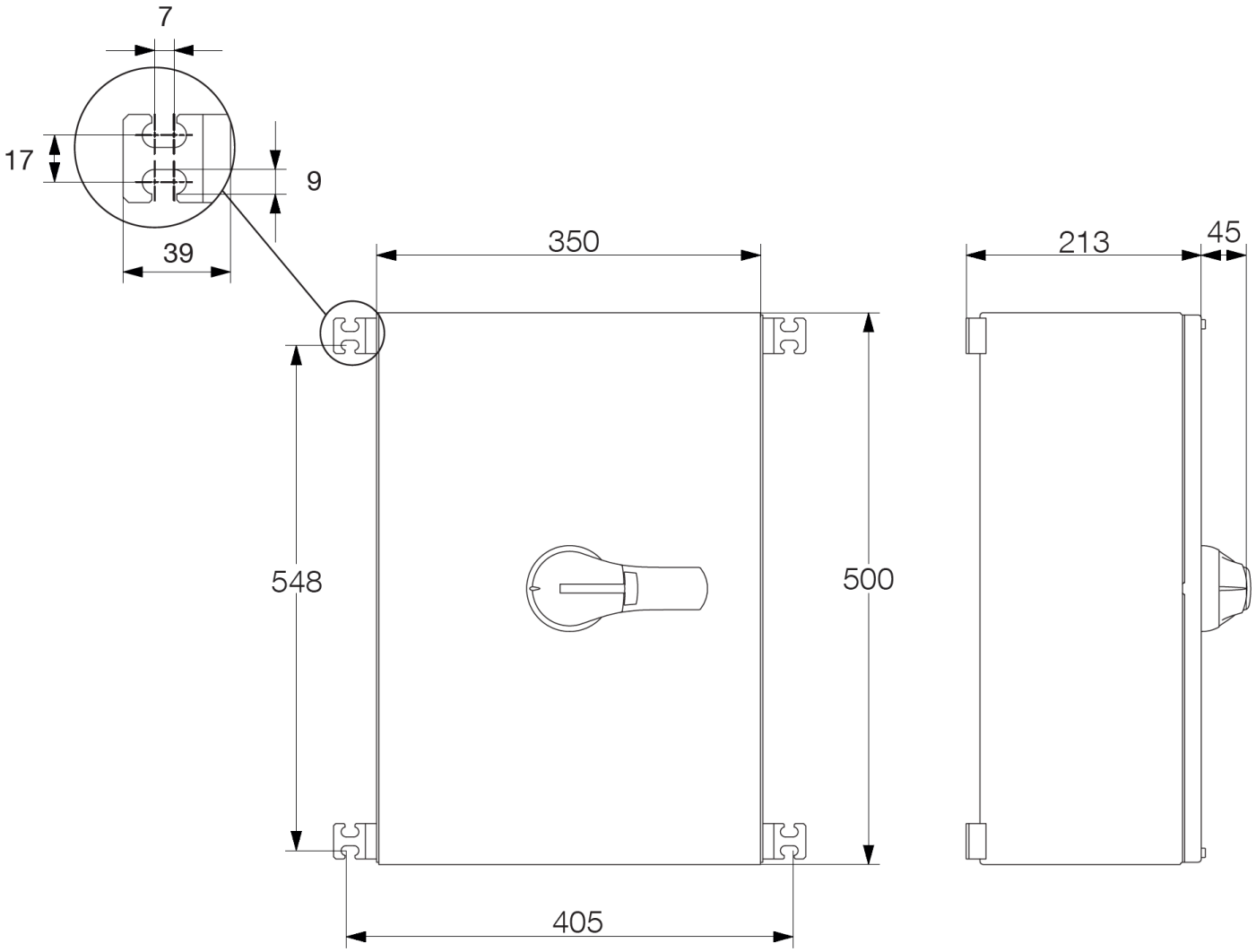

RELATED PRODUCTS

ACCESSORY



Item No: 22001001
Required: No
Description: Socomec SLBM Fourth Pole Module - Switched, 20A



Item No: 22001004
Required: No
Description: Socomec SLBM Fourth Pole Module - Switched, 40A



Item No: 22001006
Required: No
Description: Socomec SLBM Fourth Pole Module - Switched, 63A



Item No: 22001008
Required: No
Description: Socomec SLBM Fourth Pole Module - Switched, 80A

Published on 02 November 2026

ISO4250MYS

Socomec ISO Enclosed Isolator, IP 65 Aluminium Yellow, Handle - Red, 4P 250A

ENCLOSED ISOLATORS

RELATED PRODUCTS

ACCESSORY



Item No: 22001010
Required: No
Description: Socomec SLBM Fourth Pole Module - Switched, 100A

Item No: 22941005
Required: No
Description: Socomec SCOM/SLBM Terminal Shroud 1P, suits 16 - 40A (QTY 2)



Item No: 22943005
Required: No
Description: Socomec SCOM/SLBM Terminal Shroud 3P, suits 16 - 40A (QTY 2)



Item No: 22990001
Required: No
Description: Socomec SLBM Auxiliary Contact, 1 N.O + 1 N.C



Item No: 22990011
Required: No
Description: Socomec SLBM Auxiliary Contact, 2 N.O



Item No: 26990031
Required: No
Description: Socomec SLB Auxiliary Contact, 1 C.O, suits 1st Position 125 - 3200A



Item No: 26990032
Required: No
Description: Socomec SLB Auxiliary Contact, 1 C.O, suits 2st Position 125 - 3200A



Item No: NB160000
Required: No
Description: Socomec ISO Neutral Pole - Unswitched (Solid), suits 160A



Item No: NB250000
Required: No
Description: Socomec ISO Neutral Pole - Unswitched (Solid), suits 250A

Published on 02 November 2026