ISO3160PGS

Socomec ISO Enclosed Isolator, IP 65 Plastic Grey, Handle - Blue, 3P 160A

ENCLOSED ISOLATORS



Component type	Switch disconnector
Range	ISO
Model	N/A
Product status	Existing

The Socomec ISO enclosed isolators deliver IP65, wall mountable, switching solutions ensuring coverage for any application. With a choice of plastic, aluminium and 316 stainless steel enclosures ranging from 25A to 250A, the range suits all environments. All handles allow for up to 3 padlocks in the OFF position and enclosure interlocking when in the ON position.

ELECTRICAL	Rated uninterrupted current Iu	160 A
	Number of poles	3
	Frequency	50/60 Hz
	Rated short-time withstand current Icw	15 kA
	Rated insulation voltage Ui	800 V
	Rated impulse withstand voltage Uimp	8 kV
	Rated operating voltage	690 V
	Number of auxiliary contacts as normally closed contact	0
	Number of auxiliary contacts as normally open contact	0
CONSTRUCTION	Colour control element	Other
	Degree of protection (IP), front side	IP65
	Degree of protection (NEMA)	4X
	Version as reversing switch	No
MECHANICAL	Padlock locking	Yes
DIMENSIONS	Height	360 mm
	Width	270 mm
	Depth	176 mm
	Weight	1.5 kg
	Connectable conductor cross section	50-95 mm²

Published on 02 November 2026

ISO3160PGS

Socomec ISO Enclosed Isolator, IP 65 Plastic Grey, Handle - Blue, 3P 160A

ENCLOSED ISOLATORS

DIMENSIONAL DIAGRAM

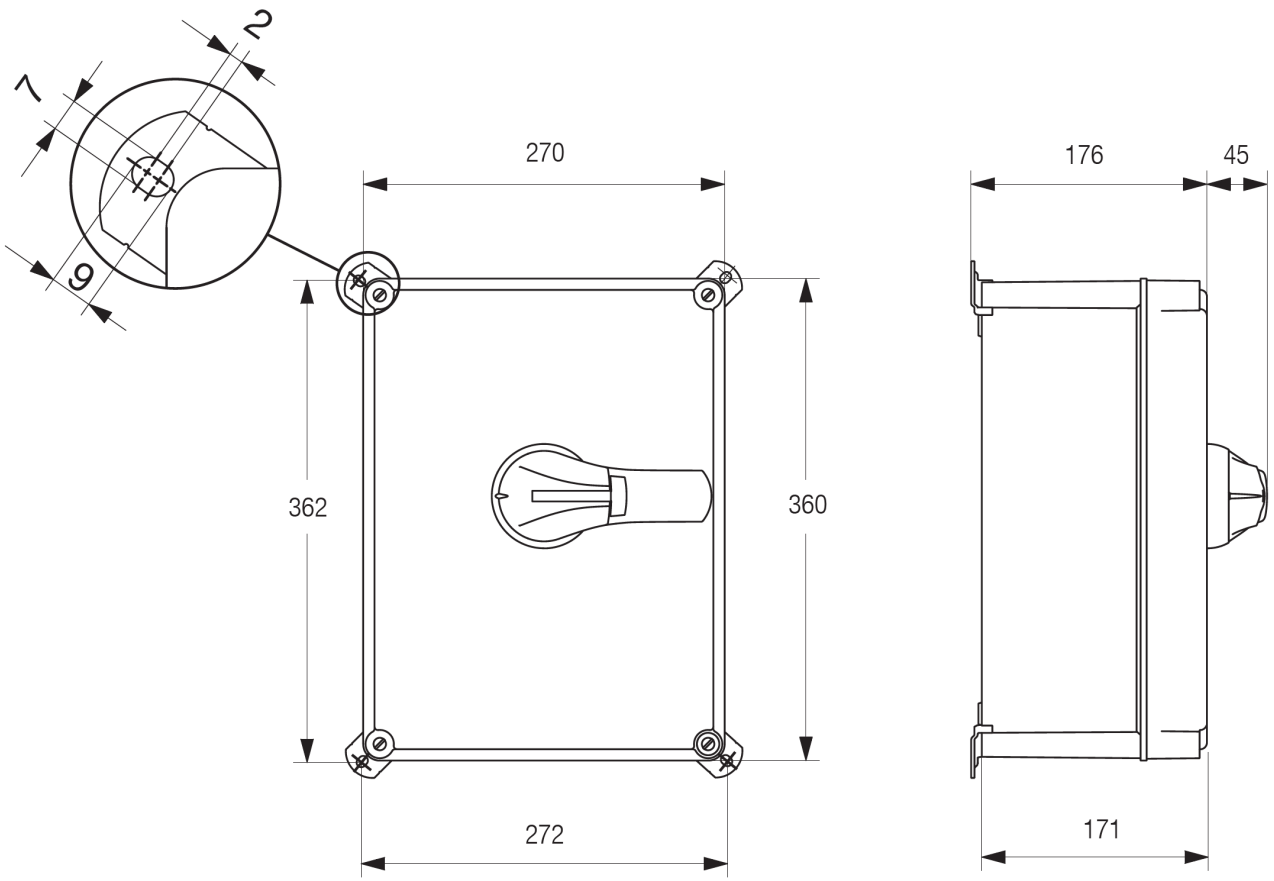

Dimensions: mm

RELATED PRODUCTS

ACCESSORY



Item No: 26943014
Required: No
Description: Socomec SLB Terminal Shroud 3P, suits SCO 125 - 200/SLB 125 -160A (QTY 1)



Item No: 26943021
Required: No
Description: Socomec SLB Terminal Shroud 3P, suits SCO 250 - 400/SLB 200 -250A (QTY 1)



Item No: 26944014
Required: No
Description: Socomec SLB Terminal Shroud 4P, suits SCO 125 - 200/SLB 125 -160A (QTY 1)



Item No: 26944021
Required: No
Description: Socomec SLB Terminal Shroud 4P, suits SCO 250 - 400/SLB 200 -250A (QTY 1)



Item No: 26990031
Required: No
Description: Socomec SLB Auxiliary Contact, 1 C.O, suits 1st Position 125 - 3200A



Item No: 26990032
Required: No
Description: Socomec SLB Auxiliary Contact, 1 C.O, suits 2st Position 125 - 3200A

Published on 02 November 2026

ISO3160PGS

Socomec ISO Enclosed Isolator, IP 65 Plastic Grey, Handle - Blue, 3P 160A

ENCLOSED ISOLATORS

RELATED PRODUCTS

ACCESSORY



Item No: NB160000

Required: No

Description: Socomec ISO Neutral Pole - Unswitched (Solid), suits 160A



Item No: NB250000

Required: No

Description: Socomec ISO Neutral Pole - Unswitched (Solid), suits 250A