CEP71EFMZ

S+S CEP71 Overload Electronic 120 to 600A Pass Through

MOTOR PROTECTION

Component type	Electronic overload relay
Range	CEP7 Gen 3
Model	N/A
Product status	Existing

The Sprecher + Schuh CEP7 Gen 3 Motor Overloads are the next generation basic-tier electronic overload relays. Accurately measuring a motor's current load and temperature, they can de-energise the motor minimising damage due to overheating. Featuring increased accuracy and repeatability, a self-powered design with lower heat dissipation, certifications and optional customisable accessory modules.

Published on 02 October 2026

CEP71EFMZ

S+S CEP71 Overload Electronic 120 to 600A Pass Through

MOTOR PROTECTION

CIRCUIT DIAGRAM

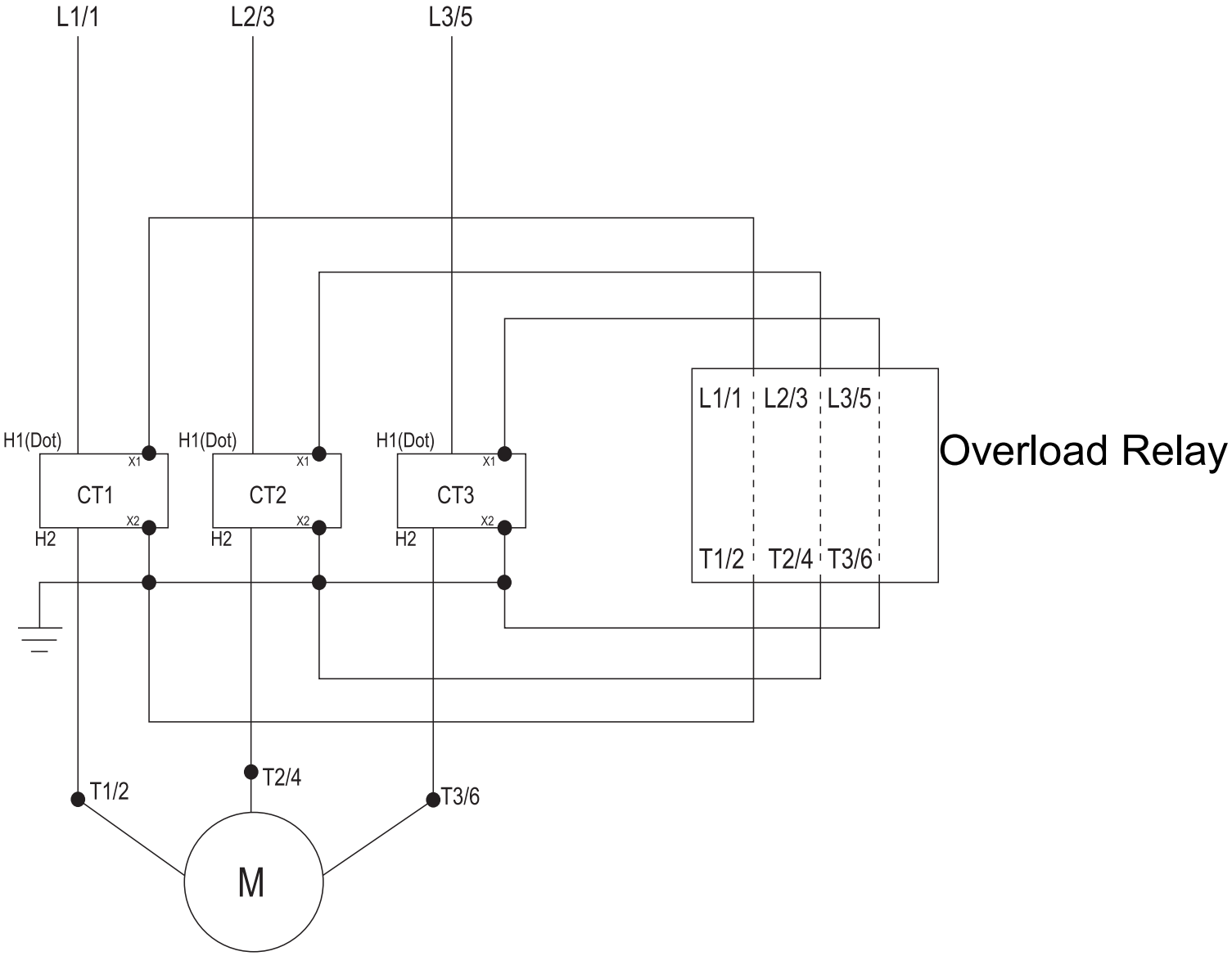

Published on 02 October 2026

RELATED PRODUCTS

ACCESSORY

Item No: CEP71BC8
Required: No
Description: S+S CEP71 Base Unit Anti Tamper Shield

Item No: CEP71EGJ
Required: No
Description: S+S CEP71 Ground Fault Jam Protection Module for CEP71 Advanced

Item No: CEP71EMRA
Required: No
Description: S+S CEP71 Reset Magnet 240VAC for CEP71

Item No: CEP71EMRD
Required: No
Description: S+S CEP71 Reset Magnet 120VAC for CEP71

Item No: CEP71EMRZ
Required: No
Description: S+S CEP71 Reset Magnet 24VDC for CEP71

Item No: CEP71ERA
Required: No
Description: S+S CEP71 External Reset Adapter

Item No: CEP71ERR
Required: No
Description: S+S CEP71 Remote Reset Module for CEP71 Advanced