800TCA1A

Allen-Bradley 800T PB 30.5mm FS Terminal Guard Flush Head Mom. Non Illuminated 1 N.O. 1 N.C. Green

PUSHBUTTON AND PILOT LIGHTS

Allen-Bradley

Component type	Push button, complete
Range	800T/H Pushbutton
Model	N/A
Product status	Existing

The Allen-Bradley 800T/H range of 30.5mm mount operators are designed and constructed to perform in the most demanding industrial environments. The range includes pushbuttons, selector switches, emergency stops, pilot lights. Available in both metal and plastic types with a modular design allowing for easy selection, configuration and assembly of components to form the operator control device.

ELECTRICAL	Number of contacts as normally open contact	1
	Number of contacts as normally closed contact	1
	Type of electric connection	Screw connection
CONSTRUCTION	Colour button	Green
	Type of button	Flush
	With front ring	Yes
	Material front ring	Metal
	IP rating	IP65/IP66
MECHANICAL	Switching function latching	No
	Max. shock acceleration	100 g
	Max. vibration acceleration	10 m/s²
	Max. vibration frequency, operational	2000 Hz
PHOTOMETRIC	Suitable for illumination	No
DIMENSIONS	Hole diameter	30.5 mm
	Operator diameter	34.9 mm

DIMENSIONAL DIAGRAM

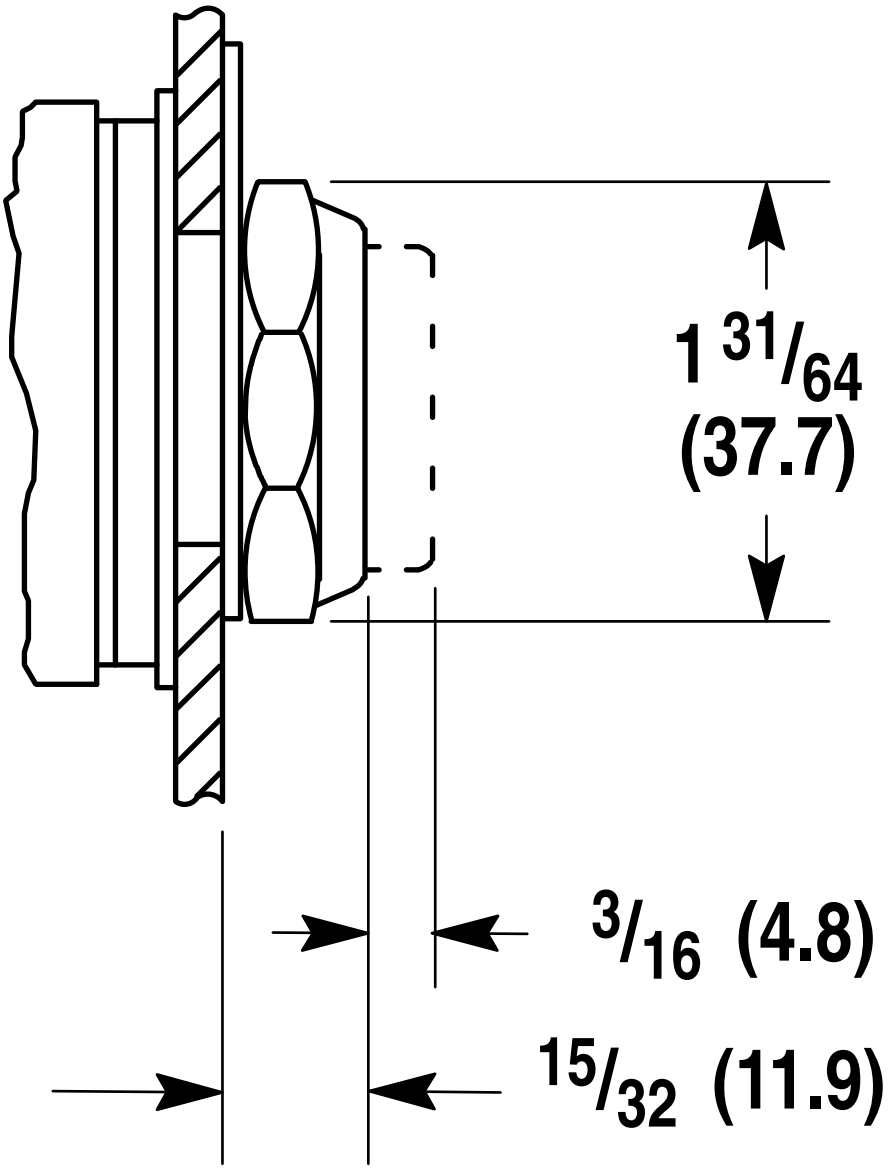

Extended Head Only

Flush and Extended Head Push Button

Shipping Wt. 5-1/2 oz (0.15 kg)

RELATED PRODUCTS

ACCESSORY

Item No: 800TCXAF
Required: No
Description: Allen-Bradley 800T Contact Block Finger Safe 1NO 1NC

Item No: 800TCXD4S
Required: No
Description: Allen-Bradley 800T Contact Block FS Terminal Guard Self Monitoring 1 N.C. Late Break for 30.5mm PB

Item No: 800TXA
Required: No
Description: Allen-Bradley 800T Contact Block Shallow 1 N.O. 1 N.C.s for 30.5mm Pushbutton

Item No: 800TXA4
Required: No
Description: Allen-Bradley 800T Contact Block Shallow 2 N.C.s for 30.5mm Pushbutton

Item No: 800TXA7
Required: No
Description: Allen-Bradley 800T Contact Block Shallow 1 N.C. Late Brake Contact 1 N.C. for 30.5mm PB

Item No: 800TXAY
Required: No
Description: Allen-Bradley 800T Contact Block Stackable Sealed Switch 1 N.C. 1 N.O. Contact for 30.5mm Pushbutton

Item No: 800TXD1
Required: No
Description: Allen-Bradley 800T Contact Block Shallow 1 N.O. Contact for 30.5mm Pushbutton

Item No: 800TXD1Y
Required: No
Description: Allen-Bradley 800T Contact Block Stackable Sealed Switch 1 Open Contact for 30.5mm Pushbutton

Item No: 800TXD2
Required: No
Description: Allen-Bradley 800T Contact Block Shallow 1 N.C. for 30.5mm PB

Item No: 800TXD2Y
Required: No
Description: Allen-Bradley 800T Contact Block Stackable Sealed Switch 1 N.C. for 30.5mm Pushbutton

Item No: 800TXD5
Required: No
Description: Allen-Bradley 800T Contact Block Mini 1 N.O. Contact for 30.5mm PB