800FPMT64

Allen-Bradley 800F E Stop 22.5mm Head Only Plastic MOM MHRM Head 60mm TTR Non Illuminated Red

PUSHBUTTON AND PILOT LIGHTS



Component type	Front element for mushroom push-button
Range	800F E-Stop
Model	N/A
Product status	Existing

The Allen-Bradley 800F Emergency stop operators are a reliable and durable solution for emergency applications in industrial environments. Available in various actuator sizes, illuminated or non-illuminated with optional key operation and self-monitoring contact block. Suitable for mounting on 22.5mm holes in both thermoplastic and metal types, designed for demanding industrial environments.

CONSTRUCTION	Suitable for emergency stop	Yes
	Colour button	Red
	Material front ring	Plastic
	Colour front ring	Other
	IP rating	IP65/IP66/IP69K
	Degree of protection (NEMA)	Other
	Type of button	High
MECHANICAL	Switching function latching	Yes
	Spring-return	No
	Unlocking method	Turn-release
	Mechanical life (service cycles)	300000 cycles
	Max. vibration acceleration	10 m/s²
	Max. vibration frequency, operational	2000 Hz
	Max. shock acceleration	100 g
PHOTOMETRIC	Suitable for illumination	No
DIMENSIONS	Diameter cap	60 mm
	Hole diameter	22.5 mm
	Width opening	89.8 mm
	Height opening	26 mm
ENVIRONMENT	Operating temperature	-25…70 °C

Published on 20 October 2026

800FPMT64

Allen-Bradley 800F E Stop 22.5mm Head Only Plastic MOM MHRM Head 60mm TTR Non Illuminated Red

PUSHBUTTON AND PILOT LIGHTS

DIMENSIONAL DIAGRAM

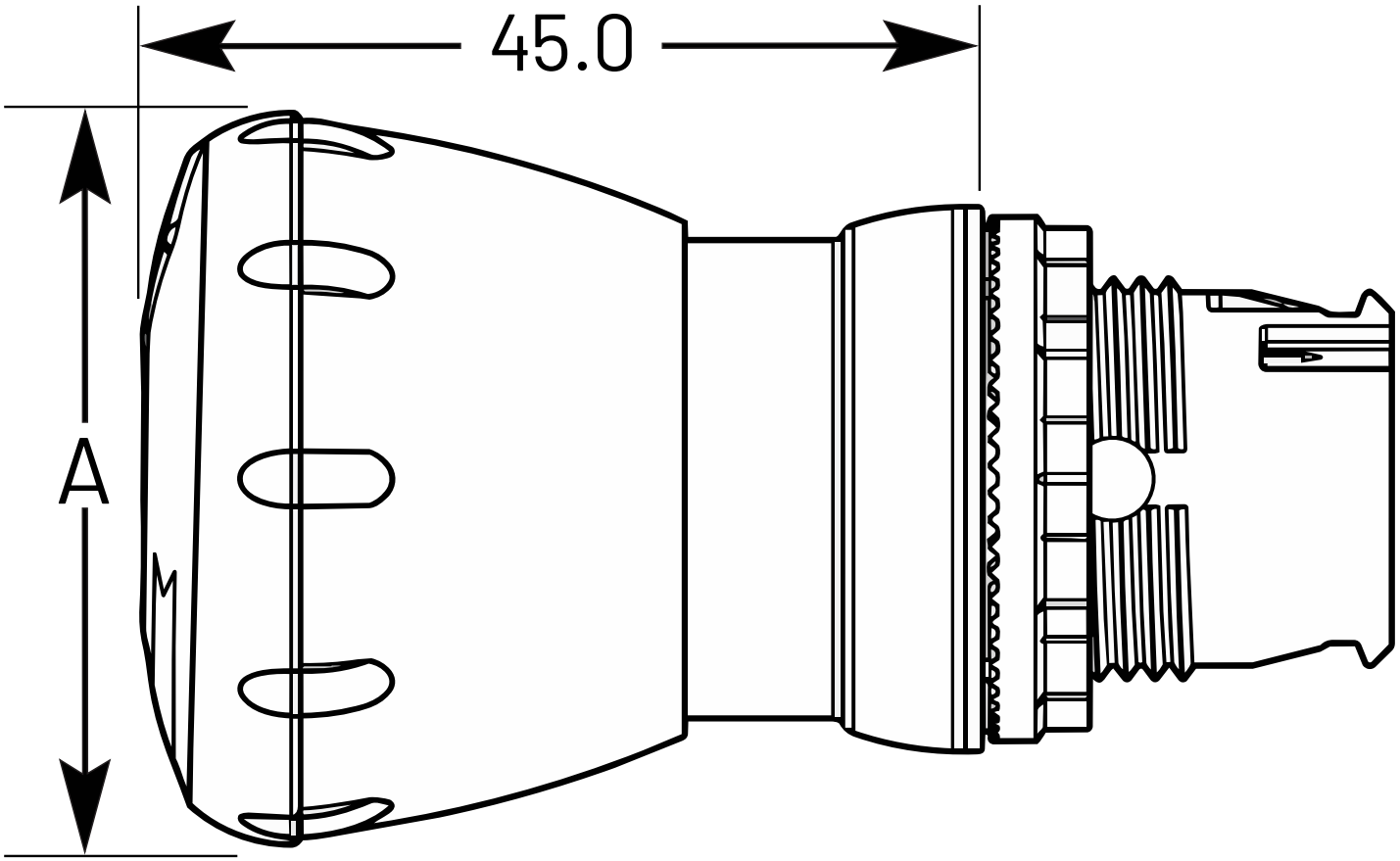

Dimensions are in millimeters.

Operator	A
30mm	30
40mm	40
60mm	60

Published on 20 October 2026

800FPMT64

Allen-Bradley 800F E Stop 22.5mm Head Only Plastic MOM MHRM Head 60mm TTR Non Illuminated Red

PUSHBUTTON AND PILOT LIGHTS

RELATED PRODUCTS

ACCESSORY



Item No: 800F15YSE112

Required: No

Description: Allen-Bradley 800F Legend Plate 60mm Round Emergency Stop 22.5 mmYellow with Black Text

Item No: 800FA6PR5

Required: No

Description: Allen-Bradley 800F Plastic Guard Yellow Round for E-stop Operators

Published on 20 October 2026