48505034

Socomec Countis P34 Three Phase Direct Connect Energy Meter 100A RS485 Pulse 4 DIN

ENERGY METERS

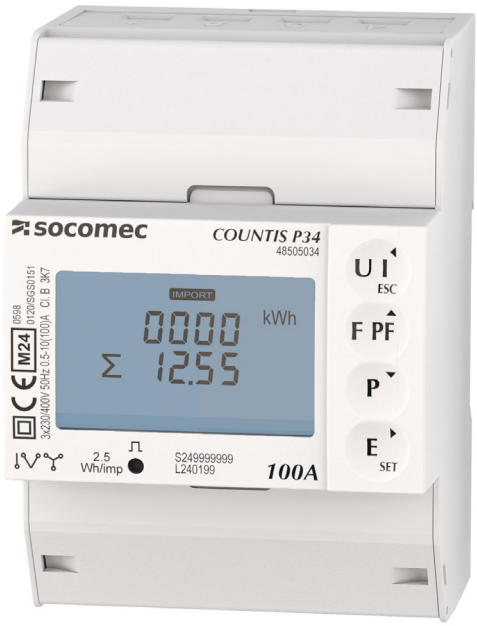

Component type	Kilowatt-hour meter
Range	Countis P
Model	N/A
Product status	Existing

The Socomec Countis P energy meter range delivers versatile and compact solutions, from direct-connect single-phase models to high-accuracy three-phase CT-connected meters. All models support bidirectional energy monitoring and Modbus RS845 communication, making them ideal for applications such as onsite renewables and EV charger monitoring.

ELECTRICAL	**Pole type**	Three conductor/four conductor
	Nominal current (In)	100 A
	Max. current (Imax)	100 A
	Nominal voltage (Un) N-L	230-230 V
	Nominal voltage (Un) L-L	400-400 V
	Frequency	50-60 Hz
	Supply voltage	184-276 V
	Type of electric connection	Screw connection
	Accuracy class	B
	Tariff type	Multi-tariff
	Tariff control	External
	Measurement type load profile	No
	Calibrated	Yes
	Power consumption	3 W
	Energy type	Effective power and blind power
COMMUNICATION	**Type of interface**	Modbus
	Pulse output	Optic
	Pulse type	S0
	With lock code	Yes
CONSTRUCTION	**Model**	Direct measurement
	Type of meter	Electronic
	Suitable for	Purchase/supply
	Type of indication	Digital
	Mounting method	DRA (DIN-rail adapter)
	Degree of protection (IP), front side	IP51
	EEC40 signature	No

Published on 01 February 2026

48505034

Socomec Countis P34 Three Phase Direct Connect Energy Meter 100A RS485 Pulse 4 DIN

ENERGY METERS

CONSTRUCTION	IP rating	IP20
MECHANICAL	Escapement mechanism	No
DIMENSIONS	Width	72 mm
	Depth	66 mm
	Height	100 mm
	Width in number of modular spacings	4
ENVIRONMENT	Operating temperature	-40…70 °C
CERTIFICATES/APPROVALS	Approval	Measuring Instruments Directive

DIMENSIONAL DIAGRAM

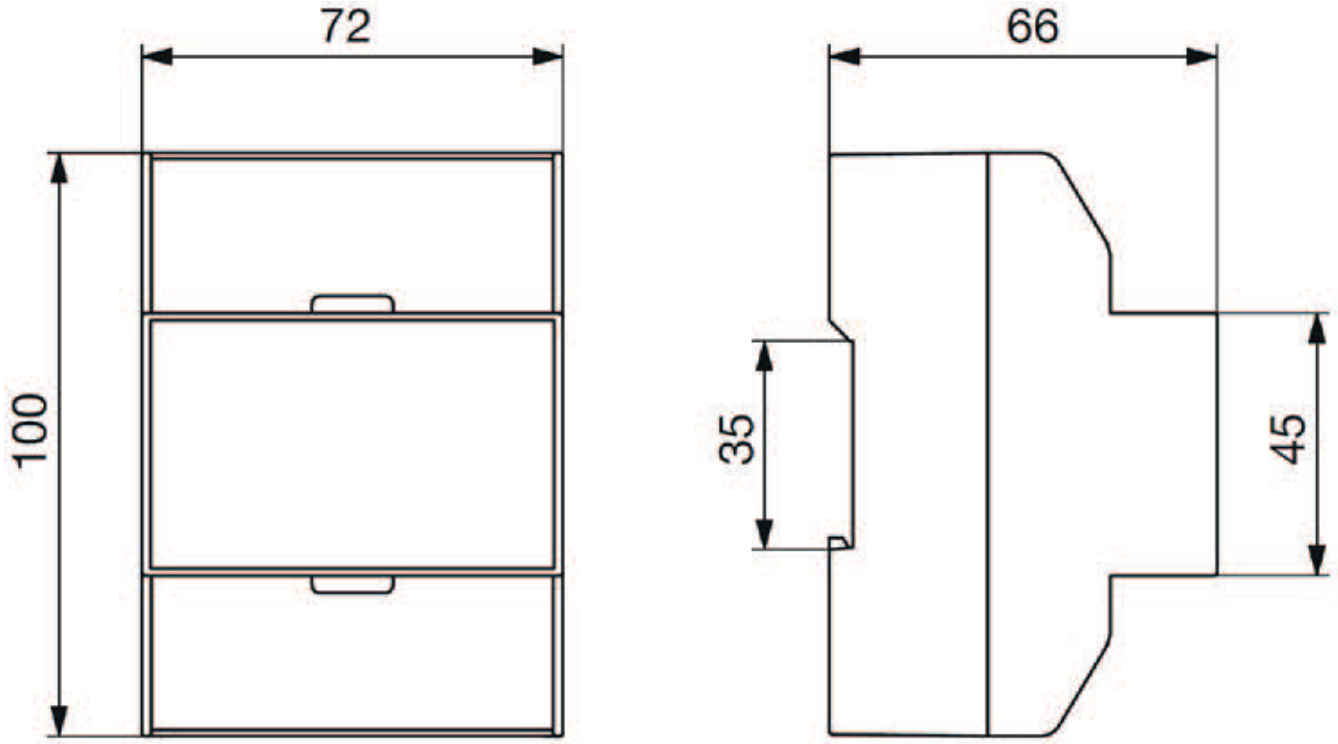

(mm)

ELECTRICAL CONNECTION DIAGRAM

Single-phase 2-wire (1P+N)

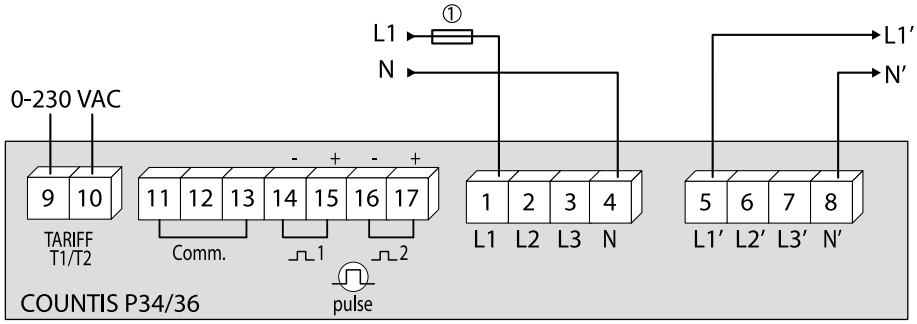

Three-phase 4-wire (3P+N)

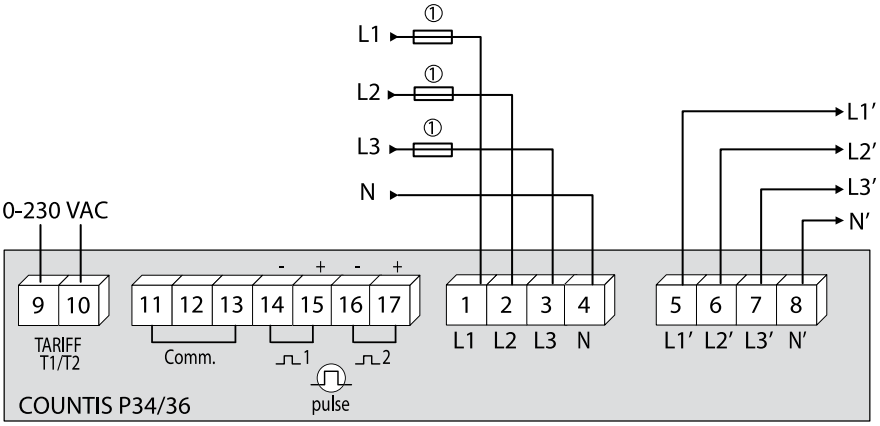
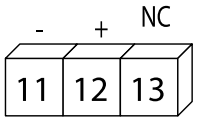
1. 100 A gG / 100 A class CC fuses.