20G11FC015JA0NNNNN

Allen-Bradley PowerFlex 755 VSD 400V Flange Mount ND 15.4A 7.5kW or HD 11.5A 5.5kW Frame 2

LARGE DRIVES



Component type	Frequency converter =< 1 kV
Range	PowerFlex 755
Model	N/A
Product status	Existing

Allen-Bradley PowerFlex 755 AC Drives are a simple and high-performance motor control application, providing a variety of solutions including pumps, fans, and conveyors. Featuring a standard built-in Ethernet/IP port, making it ideal for applications requiring flexibility, connectivity, control, advanced communications, hardware. and safety options.

ELECTRICAL	Number of phases input	3
	Nominal input voltage	400 V
	Nominal output power AC	7.5 kW
	Nominal output current I2N	15.4 A
	kW rating, normal duty	7.5 kW
	kW rating, heavy duty	5.5 kW
	Dynamic braking transistor	Yes
	Control characteristic	PID
	EMC-version	Yes
COMMUNICATION	Integrated motion function	No
CONSTRUCTION	Suitable for safety functions	Yes
	Contains keypad	No
	Frame size	2
	IP rating	IP20
DIMENSIONS	Height	481.8 mm
	Width	206.2 mm
	Depth	212 mm
	Weight	8 kg
ENVIRONMENT	Operating temperature	-20…60 °C
	Storage temperature	-40…70 °C

Published on 05 November 2026

20G11FC015JA0NNNNN

Allen-Bradley PowerFlex 755 VSD 400V Flange Mount ND 15.4A 7.5kW or HD 11.5A 5.5kW Frame 2

LARGE DRIVES

DIMENSIONAL DIAGRAM

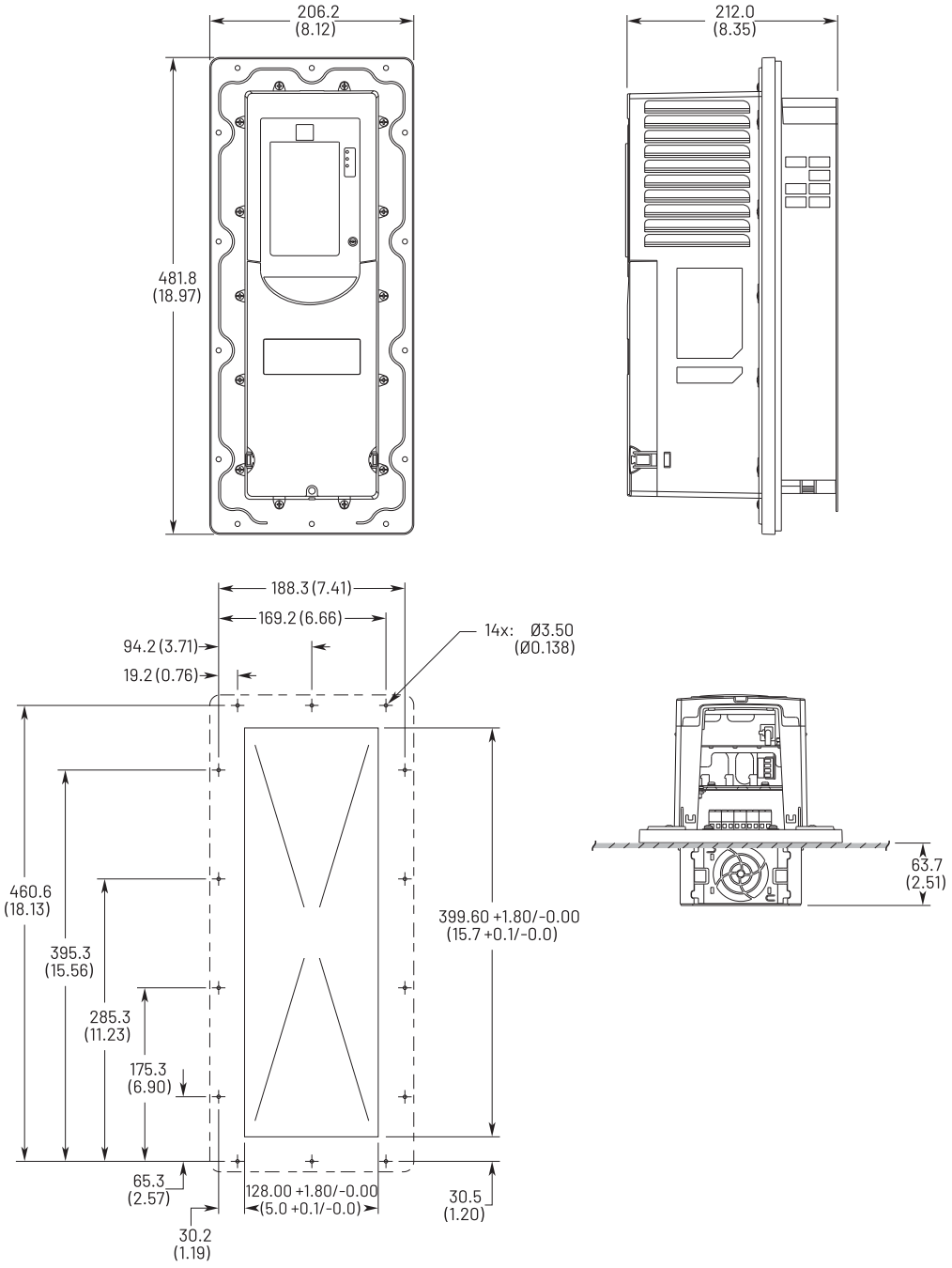

Dimensions are in millimeters and (inches).

Published on 05 November 2026

RELATED PRODUCTS

ACCESSORY



Item No: 1202C03
Required: No
Description: Allen-Bradley PowerFlex Scanprint Cable Male Male 300mm



Item No: 1202C10
Required: No
Description: Allen-Bradley PowerFlex Scanprint Cable Male Male 1m



Item No: 1202C90
Required: No
Description: Allen-Bradley PowerFlex PF 7 750 9m Extention Cable to suit 20 HIM C6S



Item No: 1202H03
Required: No
Description: Allen-Bradley PowerFlex Scanprint Cable Male Female 300mm



Item No: 1202H10
Required: No
Description: Allen-Bradley PowerFlex Scanprint Cable Male Female 1m



Item No: 1202H30
Required: No
Description: Allen-Bradley PowerFlex Scanprint Cable Male Female 3m



Item No: 1202H90
Required: No
Description: Allen-Bradley SMC-Flex 9M Extension Cable To Suit 20-HIM-C3S



Item No: 1203S03
Required: No
Description: Allen-Bradley PowerFlex and SMC Scanprint Splitter Cable Type



Item No: 1203USB
Required: No
Description: Allen-Bradley PowerFlex and SMC USB Interface for CCW Support PF Drives and SMC Soft Starters



Item No: 1204TFB2
Required: No
Description: Allen-Bradley PowerFlex Reflective Wave Reduction Drive Motor Terminator



Item No: 13213R12B
Required: No
Description: Allen-Bradley 1321 Line Reactor 400 480V 3Phase IP20 12A 2.5Mh

Item No: 13213R12C
Required: No
Description: Allen-Bradley 1321 Line Reactor 3Phase Open IP00 12A 0.42mH



Item No: 13213R18B
Required: No
Description: Allen-Bradley 1321 Line Reactor 400 480V 3Phase IP20 18A 1.5mH



Item No: 13213R18C
Required: No
Description: Allen-Bradley 1321 Line Reactor 3Phase Open IP00 18A 2.5mH



Item No: 1321RWR18DP
Required: No
Description: Allen-Bradley 1321 Reflective Wave Filter 18A 7.5kW



Item No: 1769SM1
Required: No
Description: Allen-Bradley CompactLogix 1769 DPI Scanport Module



Item No: 1786TPS
Required: No
Description: Allen-Bradley ControlNet Media RG6 Coaxial Straight T-tap



Item No: 207501132C2R
Required: No
Description: Allen-Bradley PowerFlex 750 VSD 24V DC 11 Series IO Module 1AI 1AO 3DI and 2RO

RELATED PRODUCTS

ACCESSORY



Item No: 2075020COMM
Required: No
Description: Allen-Bradley PowerFlex 750 VSD Comm Carrier



Item No: 207502262C2R
Required: No
Description: Allen-Bradley PowerFlex 750 VSD 24V DC 22 Series IO Module 2AI 2AO 6DI and 2RO

Item No: 207502262D2R
Required: No
Description: Allen-Bradley PowerFlex 750 VSD 115V AC IO Card



Item No: 207502263C1R2T
Required: No
Description: Allen-Bradley PowerFlex 750 VSD 24V DC 22 Series IO Module 2AI 2AO 6DI 1RO and 2TO



Item No: 20750APS
Required: No
Description: Allen-Bradley PowerFlex 750 VSD 24V DC Auxiliary Power Supply Module



Item No: 20750ATEX
Required: No
Description: Allen-Bradley PowerFlex 750 VSD Thermistor Input Module Req 11 Series IO Module



Item No: 20750BNETIP
Required: No
Description: Allen-Bradley PowerFlex 750 VSD BACnet IP Communication Module



Item No: 20750CNETC
Required: No
Description: Allen-Bradley PowerFlex 750 VSD Coaxial ControlNet Communication Module



Item No: 20750DENC1
Required: No
Description: Allen-Bradley PowerFlex 750 VSD Dual Incremental Encoder Module



Item No: 20750DNET
Required: No
Description: Allen-Bradley PowerFlex 750 VSD DeviceNet Communication Module



Item No: 20750EMC1F2
Required: No
Description: Allen-Bradley PowerFlex 750 VSD EMC Plate with Core Frame 2



Item No: 20750ENC1
Required: No
Description: Allen-Bradley PowerFlex 750 VSD Incremental Encoder Module



Item No: 20750ENETR
Required: No
Description: Allen-Bradley PowerFlex 750 VSD Dual Port EtherNet IP Communication Module



Item No: 20750FLNG1F2
Required: No
Description: Allen-Bradley PowerFlex 750 VSD IP20 Front Back Flange Mount Kit Frame 2

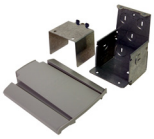

Item No: 20750NEMA1F2
Required: No
Description: Allen-Bradley PowerFlex 750 VSD IP30 Conversion Kit Frame 2



Item No: 20750PBUS
Required: No
Description: Allen-Bradley PowerFlex 750 VSD Profibus DPV1 Communication Module



Item No: 20750PNET
Required: No
Description: Allen-Bradley PowerFlex 750 VSD Single Port Profinet IO Communication Module

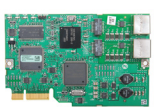

Item No: 20750PNET2P
Required: No
Description: Allen-Bradley PowerFlex 750 VSD Dual Port Profinet IO Communication Module

20G11FC015JA0NNNNN

Allen-Bradley PowerFlex 755 VSD 400V Flange Mount ND 15.4A 7.5kW or HD 11.5A 5.5kW Frame 2

LARGE DRIVES

RELATED PRODUCTS

ACCESSORY



Item No: 20750S
Required: No
Description: Allen-Bradley PowerFlex 750 VSD Safe Torque Off Module



Item No: 20750S1
Required: No
Description: Allen-Bradley PowerFlex 750 VSD Safe Speed Monitor Module



Item No: 20750S3
Required: No
Description: Allen-Bradley PowerFlex 755 VSD Network Safe Torque Off Module



Item No: 20750S4
Required: No
Description: Allen-Bradley PowerFlex 755 VSD Network Integrated Safety Functions Option



Item No: 20750UFB1
Required: No
Description: Allen-Bradley PowerFlex 750 VSD Universal Feedback Encoder Module



Item No: 20COMMC
Required: No
Description: Allen-Bradley PowerFlex VSD Coaxial ControlNet Communication Module



Item No: 20COMMD
Required: No
Description: Allen-Bradley PowerFlex VSD DeviceNet Communication Module



Item No: 20COMME
Required: No
Description: Allen-Bradley PowerFlex VSD Single Port EtherNet IP Communication Module



Item No: 20COMMH
Required: No
Description: Allen-Bradley PowerFlex VSD RS485 HVAC to DPI Communication Adaptor



Item No: 20COMMM
Required: No
Description: Allen-Bradley PowerFlex VSD Modbus TCP Communication Module



Item No: 20HIMA0
Required: No
Description: Allen-Bradley PowerFlex VSD Mount Blank Plate



Item No: 20HIMA6
Required: No
Description: Allen-Bradley PowerFlex VSD Mount LCD Display and Programmer



Item No: 20HIMB1
Required: No
Description: Allen-Bradley PowerFlex VSD Progammer Panel Mount Bezal Kit



Item No: 20HIMC6S
Required: No
Description: Allen-Bradley PowerFlex VSD Remote Panel Mount IP66 LCD Display and Programmer including 3m Cable



Item No: 20HIMH10
Required: No
Description: Allen-Bradley PowerFlex VSD Remote Programmer Cable 1m



Item No: 20XCOMMACPS1
Required: No
Description: Allen-Bradley PowerFlex VSD External DPI Comm AC Power Supply



Item No: 20XCOMMDCBASE
Required: No
Description: Allen-Bradley PowerFlex VSD External Comm Kit DC Base

Item No: 20XCOMMIOOPT1
Required: No
Description: Allen-Bradley PowerFlex VSD External DPI Comm IO Option 1

Published on 05 November 2026