06208

Finder Panel Mount and Power Relays Mounting Bracket for 62 Series

GENERAL PURPOSE RELAYS

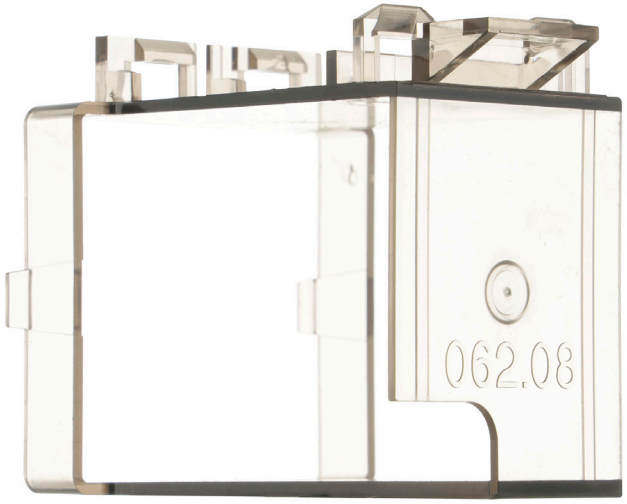

Component type	Accessories/spare parts for switching relay
Range	Panel Mount and Power Relay
Model	N/A
Product status	Existing

The Finder General Purpose Panel Mount and Power Relays are a reliable and efficient switching solution for various applications and industries. Options include coil voltages, output current ratings, contact configurations. A modular design allows for surge suppressors, coil indication and timers. Features manual override, push-to-test, slots for markers, jumpers and gold-plated contacts.

CONSTRUCTION	Spare part	No

DIMENSIONAL DIAGRAM

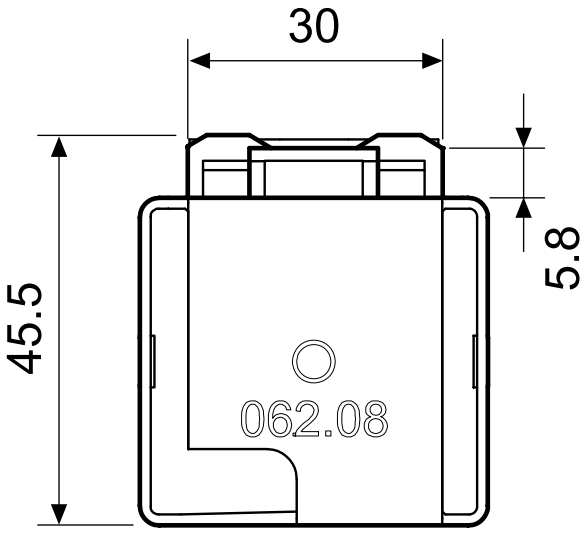

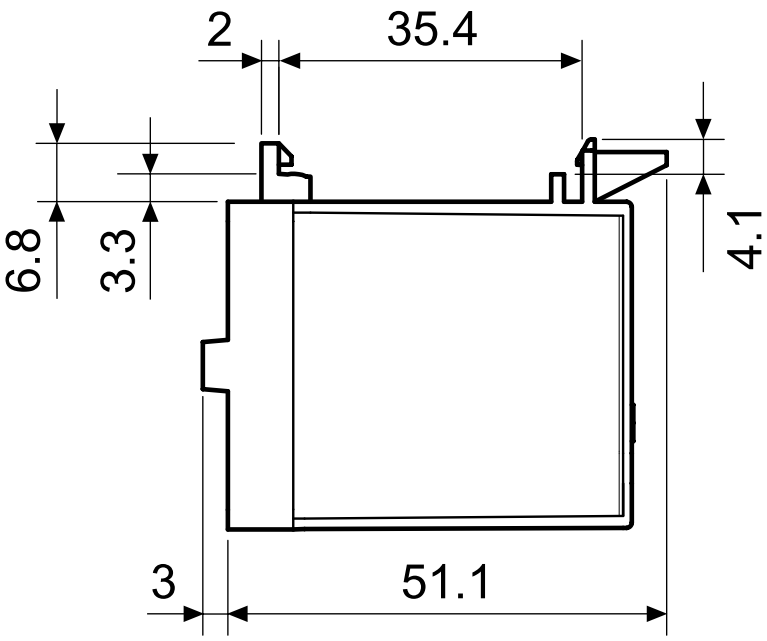

Published on 29 October 2026