TAS8012005

IME TAS80 Solid Core Current Transformer Horizontal 1200A/5A 82 x 32mm 5VA Class 1, 20VA Class 0.5

CURRENT TRANSFORMERS AND TRANSDUCERS

IME

Component type	Current transformer
Range	Solid Core CT
Model	N/A
Product status	Existing

The IME solid core current transformers are highly accurate and cover a broad range of sizes and form factors that suit busbar, cable or protection class applications.

ELECTRICAL	**Primary rated current**	1200 A
	Secondary current on CT	5 A
	Rated operating frequency	47-63 Hz
	Max. operating voltage (Umax)	0.72 V
	Rated short time thermal current Ith (x primary current)	72 kA
	Rated continuous thermal current Icth (x primary current)	72 kA
	Accuracy class	0.5
	Insulation class (IEC 61869-1, 61869-2)	B
	Security factor	5
	Rated burden, class 1	5 VA
	Power loss	36 W
CONSTRUCTION	**Current transformer type**	Solid core
	Material housing	Polycarbonate (PC)
ENVIRONMENT	**Storage temperature**	-40…85 °C

TAS8012005

IME TAS80 Solid Core Current Transformer Horizontal 1200A/5A 82 x 32mm 5VA Class 1, 20VA Class 0.5

CURRENT TRANSFORMERS AND TRANSDUCERS

DIMENSIONAL DIAGRAM

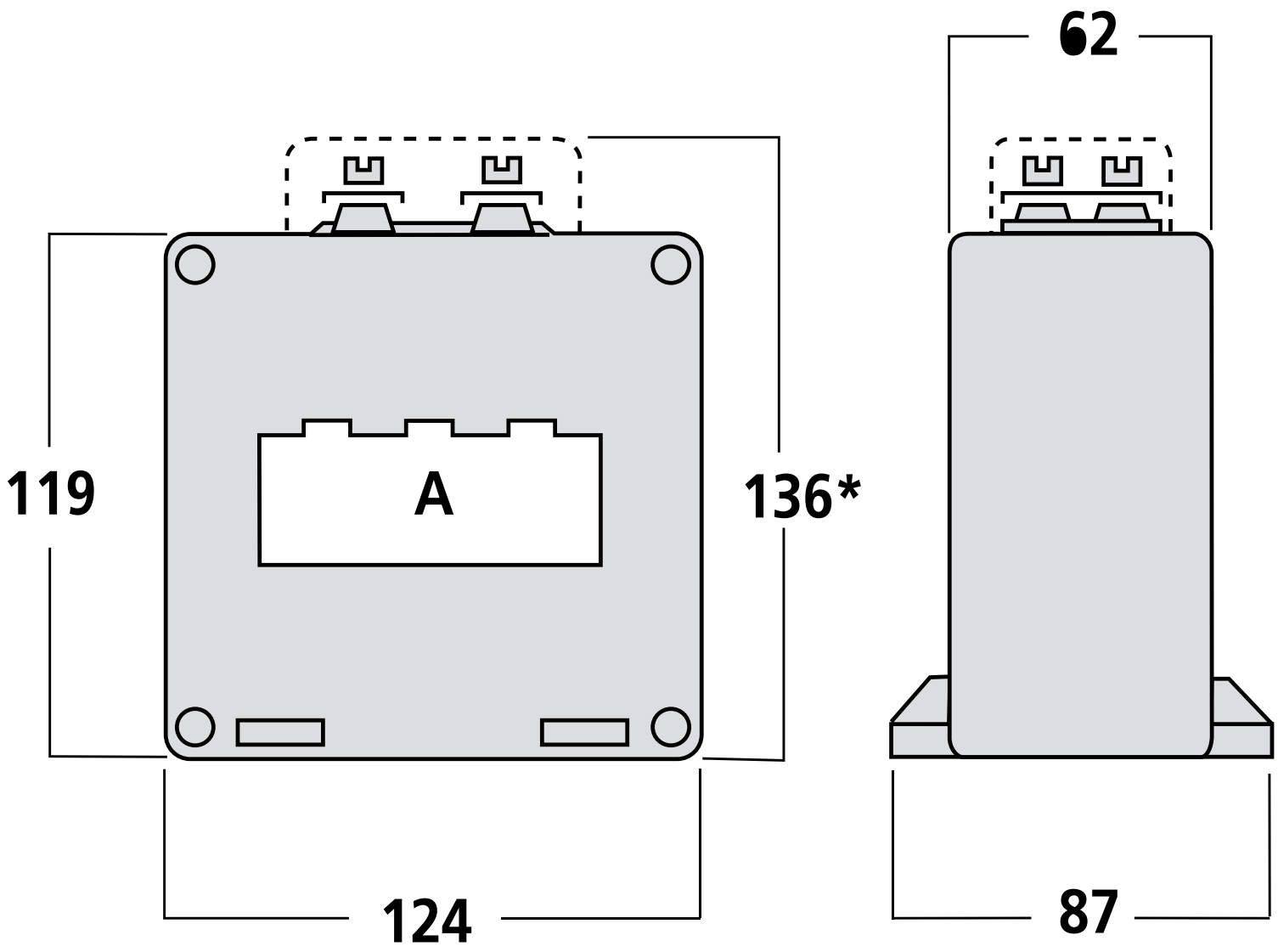

Published on 10 April 2026