RQT72N5A1K

IME Analogue Max Current Demand Ammeter 5A CT Connect Scale 0 to 1kA Overrange Max 1.5kA AC

ANALOGUE AND DIGITAL METERS

IME

Component type	Ampere meter for installation
Range	Analogue Meters
Model	N/A
Alternative	CALL FOR ALTERNATIVE

NHP offers a comprehensive range of IME voltmeters, ammeters, and many other analogue measurement devices. Available in both AC and DC, direct connected or via transformers, transducers or shunts. These meters are available as 48, 72 and 96mm panel mount form.

ELECTRICAL	Rated insulation voltage Ui	600 V
	Type of measuring component	Analogue
	Accuracy class	3
	Voltage type	AC
	Rated burden	2.5 VA
	Mains frequency	50 Hz
	Nominal frequency	45-65
	Current overload capacity, continuous value	0.01 kA
	Output display units	kA
	Output display range (configurable or not)	1 A
	Input units	A
	Nominal end value of the scale	1000 A
	Transformer connection	Yes
	Stay-set indicator	Yes
COMMUNICATION	Overrange indication	Yes
CONSTRUCTION	Model	Front mounting
	Housing material	Plastic
	Measurement system	Moving coil
	Degree of protection (IP), front side	IP52
	Degree of protection (IP), mounted	IP20
MECHANICAL	Connection type	Screwed terminal
	Number of meters displayed	1
	Max. needle deflection	90 °
DIMENSIONS	Ampmeter width	72 mm
	Ampmeter height	72 mm
	Height (cutout)	68 mm

RQT72N5A1K

IME Analogue Max Current Demand Ammeter 5A CT Connect Scale 0 to 1kA Overrange Max 1.5kA AC

ANALOGUE AND DIGITAL METERS

IME

DIMENSIONS	Width (cutout)	68 mm
	Depth	69 mm
	Weight	0.19 kg
	Width	96 mm
	Height	96 mm
ENVIRONMENT	Storage temperature	-40…80 °C
	Operating temperature	-25…50 °C
	Pollution degree	2

DIMENSIONAL DIAGRAM

AQ/RQ Analogue meters

Meter dimensions

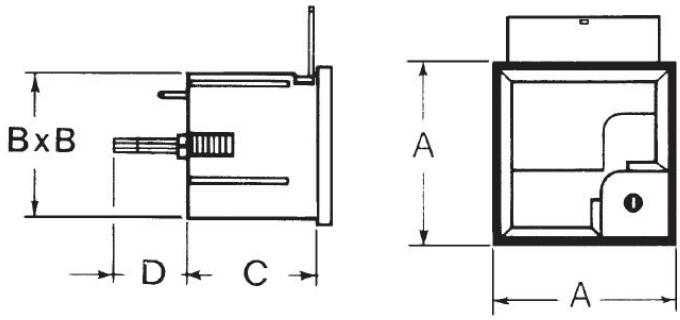

Meter cut-out dimensions

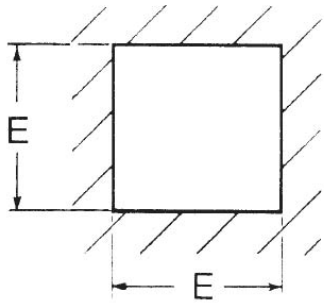

Overall dimensions (mm)

Cat. No.	A	B	C	D	E
RQ48	48 x 48	44.5 x 44.5	40	22	45
AQ48	48 x 48	44.5 x 44.5	57.5	22	45
RQ72	72 x 72	66.5 x 66.5	44	12	68
AQ72	72 x 72	66.5 x 66.5	59	12	68
RQ96	96 x 96	91 x 91	44	12	92
AQ96	96 x 96	91 x 91	59	12	92