PPB02CM48

Carlo Gavazzi Monitoring Relay 3 Phase Nuetral Over/Under Volt Phase Seq/Loss/Asym 380 to 480VAC 1CO

MONITORING RELAYS



Component type	Phase monitoring relay
Range	V/I/PH/PF Monitoring
Model	N/A
Alternative	704184002030

The Carlo Gavazzi range of monitoring relays are designed for the detection of phase loss and incorrect phase sequence to over/under current and voltage. Suitable for use in a wide range of applications that require protection against people, fire, earth current leakage, or incorrect mains or cable connections. Installation is easy with front dials and DIP switches.

ELECTRICAL	Rated operating voltage Ue	380-480 V
	Rated frequency	50-60 Hz
	Phase failure detection	Yes
	Phase sequence monitoring	Yes
	Phase imbalance monitoring	Yes
	Number of contacts as change-over contact	1
	Rated operation current Ie	8 A
	Rated operation current Ie at AC-15, 230 V	2.5 A
	Rated operation current Ie at DC-12, 24 V	5 A
	Rated operation current Ie at DC-13, 24 V	2.5 A
	Voltage type for actuating	Self powered
	Over voltage category	III
	Type of electric connection	Plug-in connection
	Min. adjustable delay-on energization time	1 s
	Max. permitted delay-on energization time	6 s
	Min. adjustable off-delay time	0.1 s
	Max. permitted off-delay time	30 s
CONSTRUCTION	Material contact	Silver tin-oxide
	Suitable for plug-in socket mounting	Yes
	IP rating	IP20
DIMENSIONS	Height	80 mm
	Width	36 mm
	Depth	94 mm
ENVIRONMENT	Storage temperature	-30…80 °C

Published on 17 November 2026

PPB02CM48

Carlo Gavazzi Monitoring Relay 3 Phase Nuetral Over/Under Volt Phase Seq/Loss/Asym 380 to 480VAC 1CO

MONITORING RELAYS

DIMENSIONAL DIAGRAM

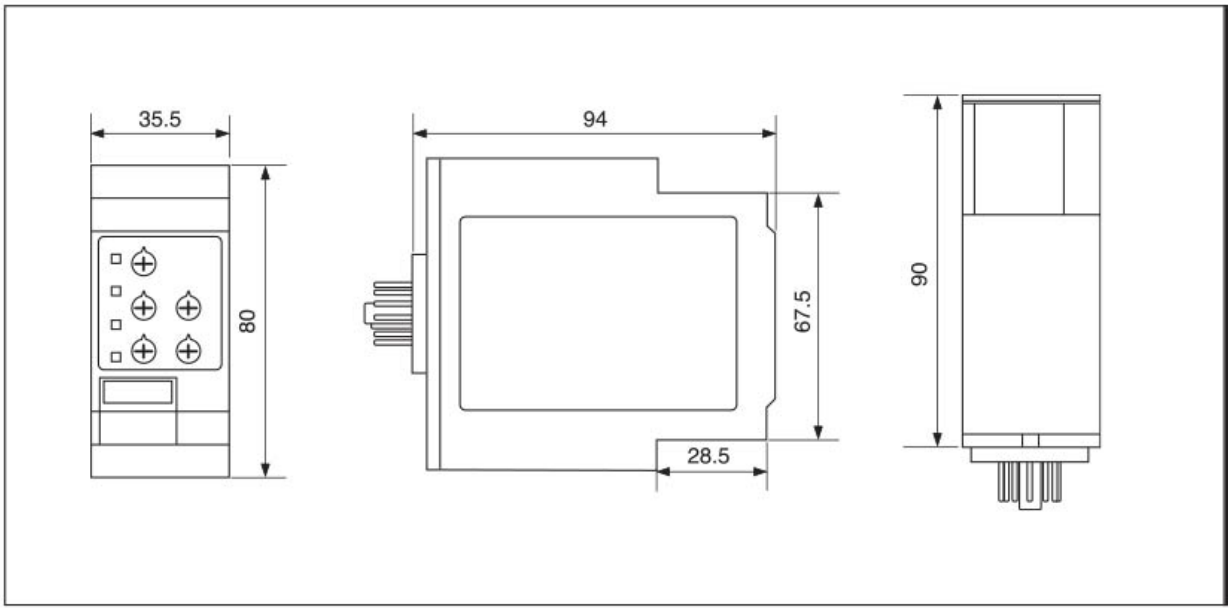

Published on 17 November 2026