# MOLEDA12503G

**Moflash LEDA125 Sounder 48 LEDS Steady/ Flash Mode 2 x IP65 115VAC Wall/ Surface Mnt Green**

BEACONS




| | |
|---|---|
| **Component type** | Signalling device |
| **Range** | LED Beacon |
| **Model** | N/A |
| **Product status** | Existing |

The Moflash range of LED Beacons are a highly efficient and durable visual signalling solution for industrial and commercial applications. LED technology ensures a bright output, visible from a distance with a wide choice of colours, sizes, outputs, configurations, voltages, mounting options and a variety of operation modes such as flashing or rotating.

| | | |
|---|---|---|
| **ELECTRICAL** | Rated operation current Ie | 0.06 A |
| | Nominal voltage | 115-115 V |
| | Type of current | AC |
| | Electricity consumption | 0.06 A |
| **COMMUNICATION** | Compatible with Apple HomeKit | No |
| | Compatible with Google Assistant | No |
| | Compatible with Amazon Alexa | No |
| **CONSTRUCTION** | Type of indication | Acoustic and optic |
| | Colour of lamp hood | Green |
| | Mounting method | Other |
| | Material housing | ABS |
| | Colour housing | Black |
| | IP rating | IP65 |
| **MECHANICAL** | Suitable for ceiling mounting | Yes |
| **PHOTOMETRIC** | Lamp type | LED |
| | Illumination mode | Continuous light |
| **AUDIBILITY** | Type of acoustic signal device | Sound generator |
| | Type of acoustic signal | Pulse tone |
| | Loudness | 90 dB |
| **DIMENSIONS** | Weight | 0.57 kg |
| **ENVIRONMENT** | Rated temperature | -20…45 °C |



Published on 08 September 2026

# MOLEDA12503G

**Moflash LEDA125 Sounder 48 LEDS Steady/ Flash Mode 2 x IP65 115VAC Wall/ Surface Mnt Green**

BEACONS

## DIMENSIONAL DIAGRAM

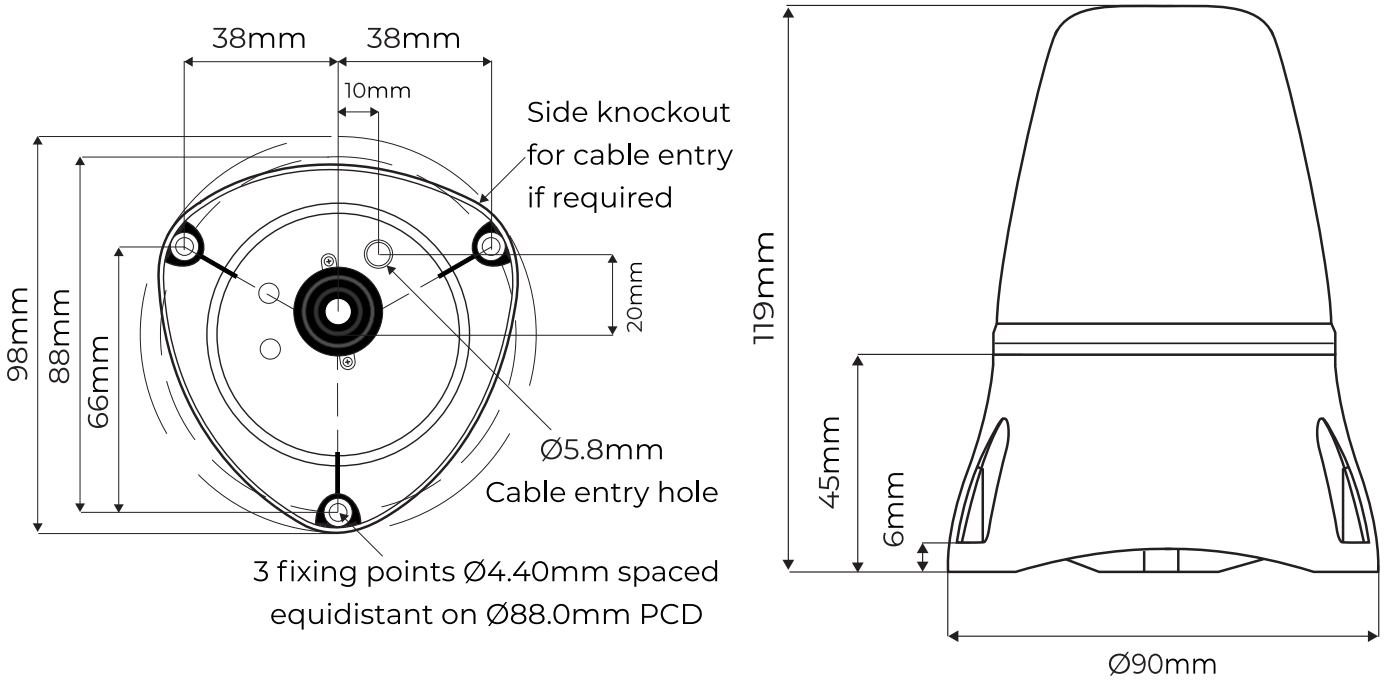


## RELATED PRODUCTS

### ACCESSORY



**Item No:** MO50003

**Required:** No

**Description:** Moflash Filament and Halogen Beacons Cage Guard Small PLT Coated White Steel suits 125 Series Beacon



**Item No:** MO50007

**Required:** No

**Description:** Moflash Filament and Halogen Beacons Right Angle Wall Bracket suits 3 Point 125 Series Beacons

**Item No:** MO50080

**Required:** No

**Description:** Moflash Filament and Halogen Beacons Anti Vibration Bracket for MOFF125 MOFF200 and MOFF201 Beacon

**Item No:** MO50124

**Required:** No

**Description:** Moflash Filament and Halogen Beacons Traffic Light Bracket with Glands L118mm Single Module

**Item No:** MO50125

**Required:** No

**Description:** Moflash Filament and Halogen Beacons Traffic Light Bracket with Glands L227mm Double Module





Published on 08 September 2026