MOLEDA10005G

Moflash LEDA100 ECO Sounder Cap 8 LEDS Sty/ Fls Mode IP65 85-280VAC and 85-380VDC W/ S Mnt Green

BEACONS



Component type	Signalling device
Range	LED Beacon
Model	N/A
Product status	Existing

The Moflash range of LED Beacons are a highly efficient and durable visual signalling solution for industrial and commercial applications. LED technology ensures a bright output, visible from a distance with a wide choice of colours, sizes, outputs, configurations, voltages, mounting options and a variety of operation modes such as flashing or rotating.

ELECTRICAL	Rated operation current Ie	0.04 A
	Nominal voltage	85-280 V
	Type of current	AC/DC
	Electricity consumption	0.04 A
COMMUNICATION	Compatible with Apple HomeKit	No
	Compatible with Google Assistant	No
	Compatible with Amazon Alexa	No
CONSTRUCTION	Colour of lamp hood	Green
	Mounting method	Other
	Colour housing	Black
	IP rating	IP65
MECHANICAL	Suitable for ceiling mounting	Yes
PHOTOMETRIC	Lamp type	LED
	Illumination mode	Continuous light
AUDIBILITY	Type of acoustic signal device	Sound generator
	Type of acoustic signal	Pulse tone
	Loudness	80 dB
ENVIRONMENT	Rated temperature	-25…55 °C

Published on 08 September 2026

MOLEDA10005G

Moflash LEDA100 ECO Sounder Cap 8 LEDS Sty/ Fls Mode IP65 85-280VAC and 85-380VDC W/ S Mnt Green

BEACONS

DIMENSIONAL DIAGRAM

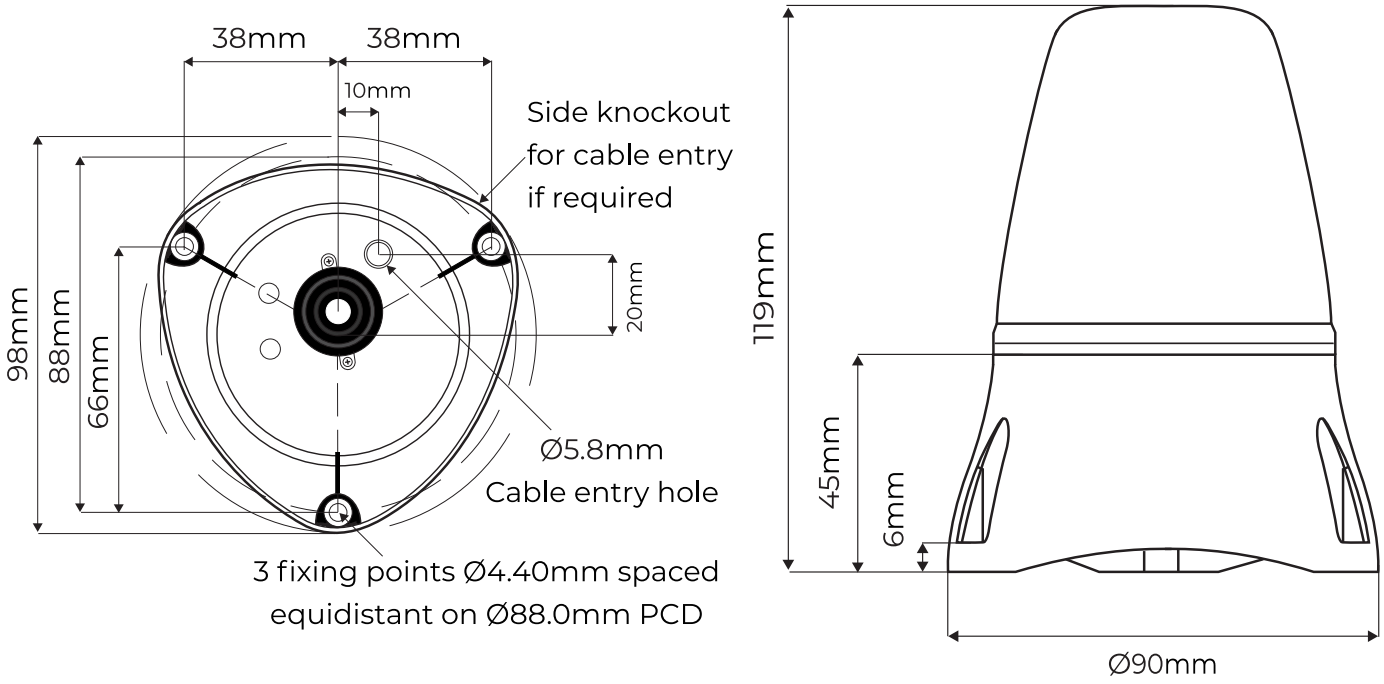

Published on 08 September 2026