# HVL03103

**STEGO Fan Heater 230V AC H80 x W112 x D47mm 150W**

HEATERS



| | |
|---|---|
| **Component type** | Heating (enclosure/cabinet) |
| **Range** | Semiconductor Heater |
| **Model** | N/A |
| **Product status** | Existing |

The Stego heaters are available in a range of sizes, outputs and operating voltages, to effectively prevent condensation inside the enclosure in low ambient temperatures. Manufactured in Germany, they offer long life and a reliable operation.

| | | |
|---|---|---|
| **ELECTRICAL** | Voltage type | AC |
| | Operating voltage at AC 50 Hz | 230230 V |
| **COMMUNICATION** | With room temperature controller | No |
| **CONSTRUCTION** | IP rating | IP20 |
| | Material | Aluminium |
| | Mounting method | DIN rail |
| **MECHANICAL** | With fan | Yes |
| | Cooling air flow rate | 35 m³/h |
| **DIMENSIONS** | Width | 112 mm |
| | Height | 80 mm |
| | Depth | 47 mm |
| **ENVIRONMENT** | Operating temperature | -45…70 °C |





Published on 08 September 2026

# HVL03103

**STEGO Fan Heater 230V AC H80 x W112 x D47mm 150W**

HEATERS

## DIMENSIONAL DIAGRAM

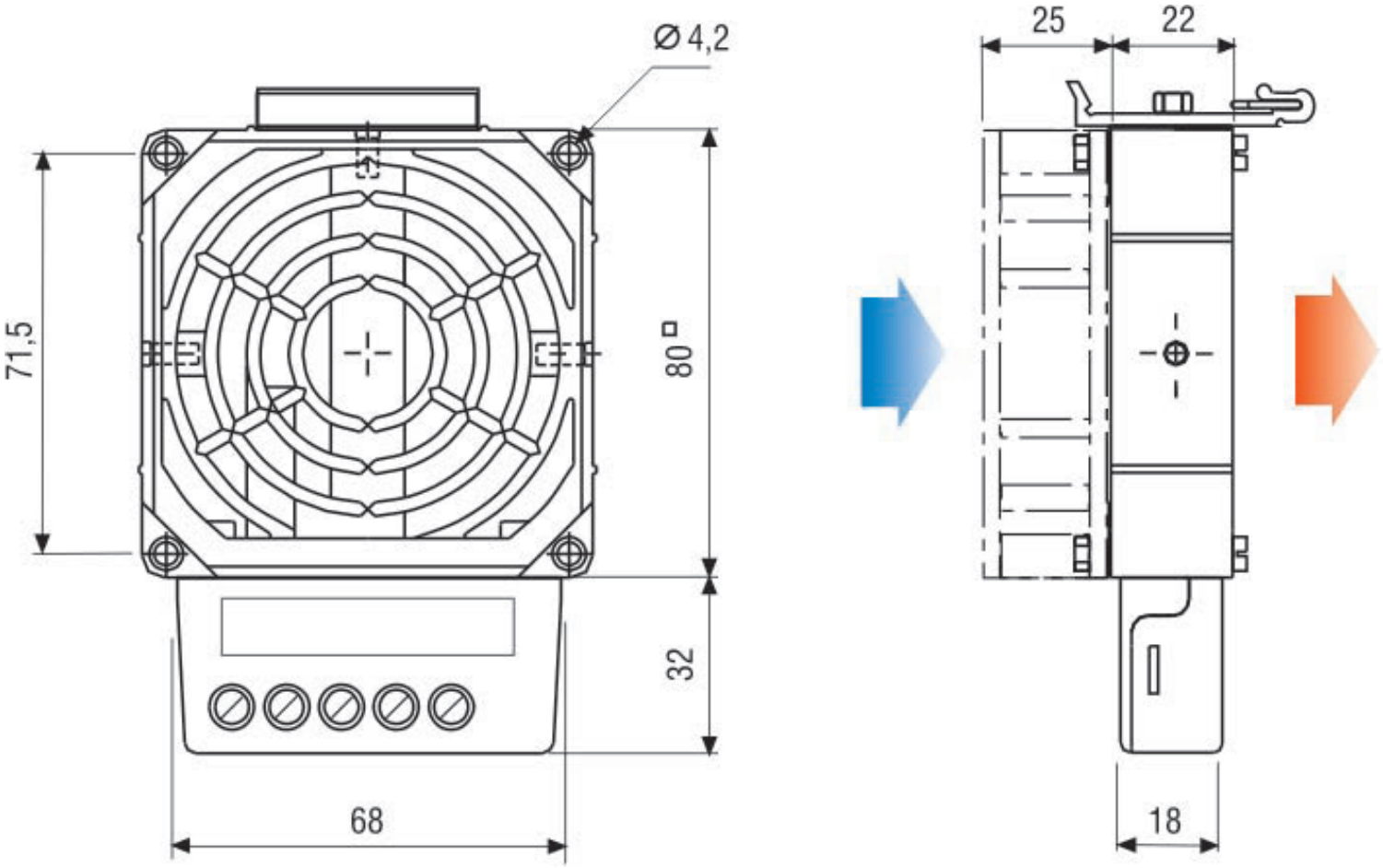






Published on 08 September 2026