# GH15T22

**Ghisalba Contactor Auxiliary Contact with 2NO Contacts and 2NC Contact Top Mount**

ELECTRICAL ENGINEERING PRODUCTS

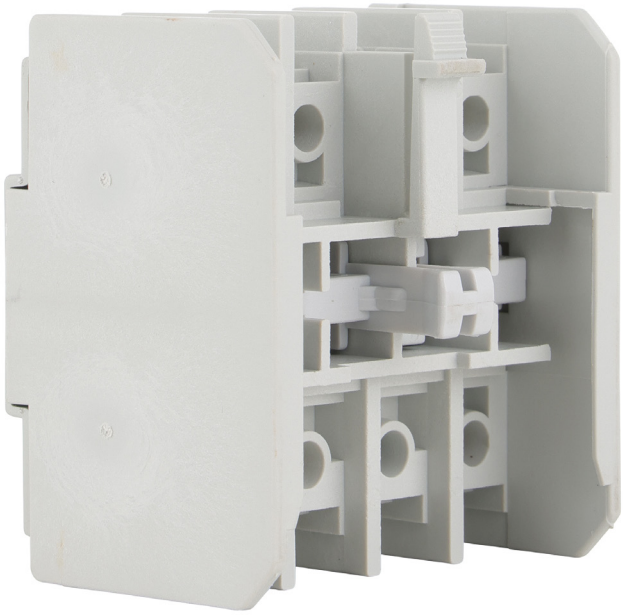

| | |
|---|---|
| **Component type** | Auxiliary contact block |
| **Range** | Contactors |
| **Model** | N/A |
| **Product status** | Existing |

Ghisalba's range of contactor families are available in a wide variety of contactor sizes, offering both economy and choice. Specialising in 3 and 4 pole contactors, with ranges from 4kW up to 710kW at 415V AC and 280kW up to 500kW at 1000V AC and additional DC switching contactors for up to 1000V DC.

| | | |
|---|---|---|
| **ELECTRICAL** | Number of contacts as normally open contact | 2 |
| | Number of contacts as normally closed contact | 2 |
| | Rated operation current Ie at AC-15, 120 V | 6 A |
| | Rated operation current Ie at AC-15, 240 V | 3 A |
| | Rated operation current Ie at AC-15, 400 V | 2 A |
| | Rated operation current Ie at DC-13, 24 V | 5 A |
| | Rated operation current Ie at DC-13, 110 V | 0.8 A |
| | Rated operation current Ie at DC-13, 220 V | 0.4 A |
| | Type of electric connection | Screw connection |
| **CONSTRUCTION** | Mounting method | Top mounting |
| | Model | Top mounting |

## DIMENSIONAL DIAGRAM

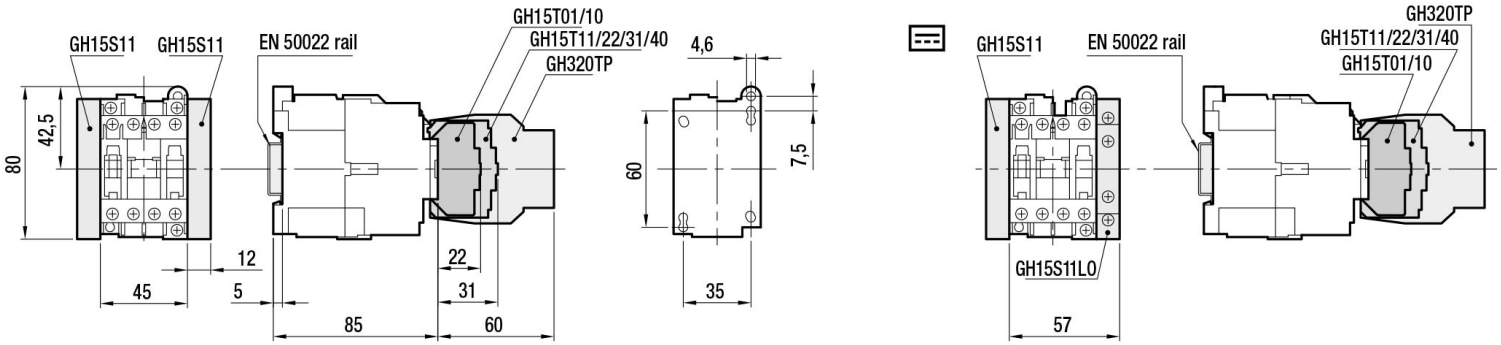




Published on 21 July 2026