GH15T11

Ghisalba Contactor Auxiliary Contact with 1NO Contact and 1NC Contact Top Mount

ELECTRICAL ENGINEERING PRODUCTS

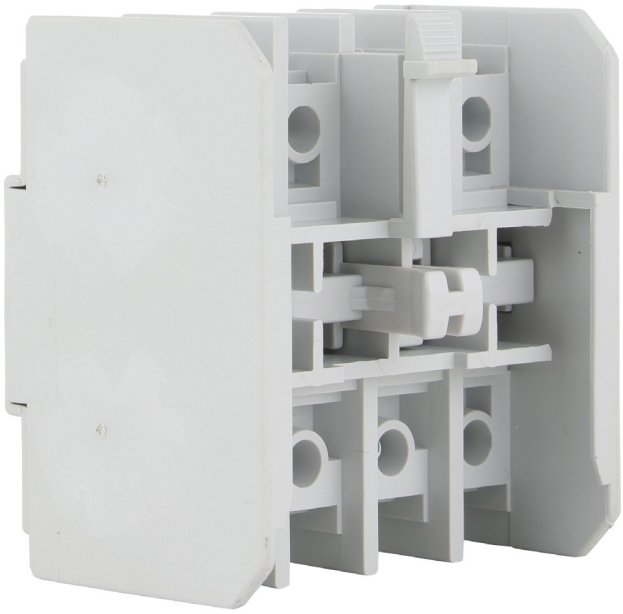

Component type	Auxiliary contact block
Range	Contactors
Model	N/A
Product status	Existing

Ghisalba's range of contactor families are available in a wide variety of contactor sizes, offering both economy and choice. Specialising in 3 and 4 pole contactors, with ranges from 4kW up to 710kW at 415V AC and 280kW up to 500kW at 1000V AC and additional DC switching contactors for up to 1000V DC.

ELECTRICAL	Number of contacts as normally open contact	1
	Number of contacts as normally closed contact	1
	Rated operation current Ie at AC-15, 120 V	6 A
	Rated operation current Ie at AC-15, 240 V	3 A
	Rated operation current Ie at AC-15, 400 V	2 A
	Rated operation current Ie at DC-13, 24 V	5 A
	Rated operation current Ie at DC-13, 110 V	0.8 A
	Rated operation current Ie at DC-13, 220 V	0.4 A
	Type of electric connection	Screw connection
CONSTRUCTION	Mounting method	Top mounting
	Model	Top mounting

DIMENSIONAL DIAGRAM

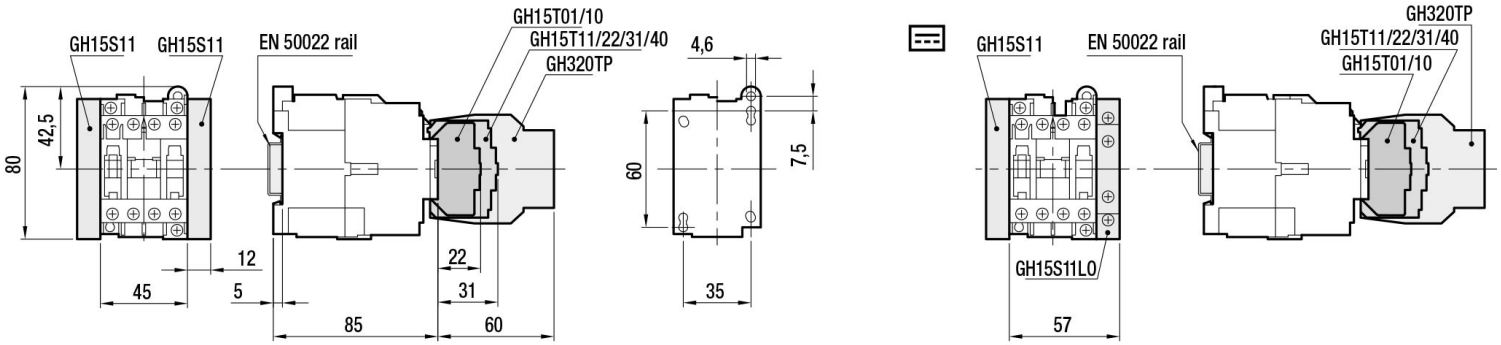

Published on 30 May 2026