GH15KT324VAC

Ghisalba Contactor 37kW 3Pole 24VAC Coil

ELECTRICAL ENGINEERING PRODUCTS



Component type	Power contactor, AC switching
Range	Contactors
Model	N/A
Product status	Existing

Ghisalba's range of contactor families are available in a wide variety of contactor sizes, offering both economy and choice. Specialising in 3 and 4 pole contactors, with ranges from 4kW up to 710kW at 415V AC and 280kW up to 500kW at 1000V AC and additional DC switching contactors for up to 1000V DC.

ELECTRICAL	**Number of normally open contacts as main contact**	3
	Number of normally closed contacts as main contact	0
	Rated operation current Ie at AC-3, 400 V	80 A
	Rated operation power at AC-3, 400 V	37 kW
	Rated operation current Ie at AC-1, 400 V	125 A
	Max. rated operation voltage Ue AC	1000 V
	Voltage type for actuating	AC
	Control supply voltage Us at AC 50HZ	24 V
	Number of auxiliary contacts as normally open contact	0
	Number of auxiliary contacts as normally closed contact	0
	Rated operation current Ie at AC-3, 1000 V	20 A
	Type of electrical connection of main circuit	Screw connection
CONSTRUCTION	**IP rating**	IP20
	Mounting method	DIN-rail/screw
DIMENSIONS	**Height**	137 mm
	Width	79 mm
	Depth	130 mm
	Weight	1.9 kg

Published on 30 May 2026

GH15KT324VAC

Ghisalba Contactor 37kW 3Pole 24VAC Coil

ELECTRICAL ENGINEERING PRODUCTS

DIMENSIONAL DIAGRAM

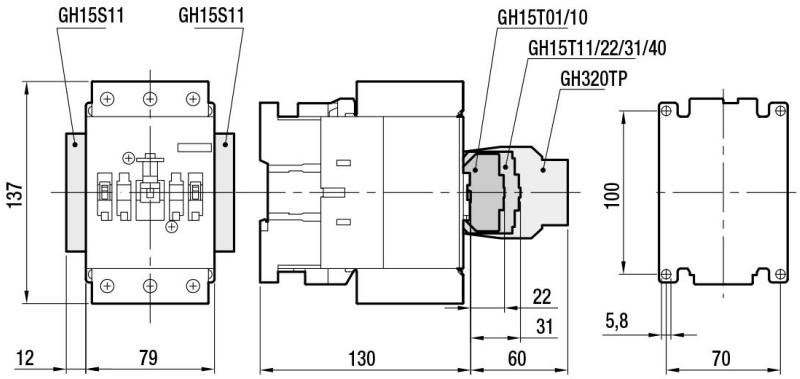

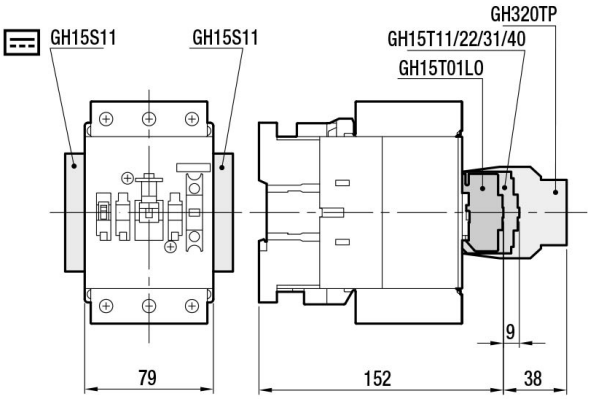

Published on 30 May 2026