GBTOC

NHP POWERMAX GB Isolation Busbar Chassis Accessory Tee Off Cap

POWERMAX
MINIATURE CIRCUIT BREAKER CHASSIS

Component type	Accessories/spare parts for busbars
Range	DIN-T GB
Model	N/A
Product status	Existing

NHP's POWERMAX DIN-T GB Busbar Chassis is a high-performance electrical distribution solution. This 250A chassis provides a quick and easy method to connect DIN-T MCB's and RCBO's. Made of high-quality copper, providing superior conductivity, along with durable busbar supports providing high withstand ratings ensuring efficient performance and a longer lifespan of the electrical system.

CONSTRUCTION

Accessory	No
Spare part	Yes
Type of accessory/spare part	General chassis accessories

Published on 24 June 2026

GBTOC

NHP POWERMAX GB Isolation Busbar Chassis Accessory Tee Off Cap

POWERMAX
MINIATURE CIRCUIT BREAKER CHASSIS

DIMENSIONAL DIAGRAM

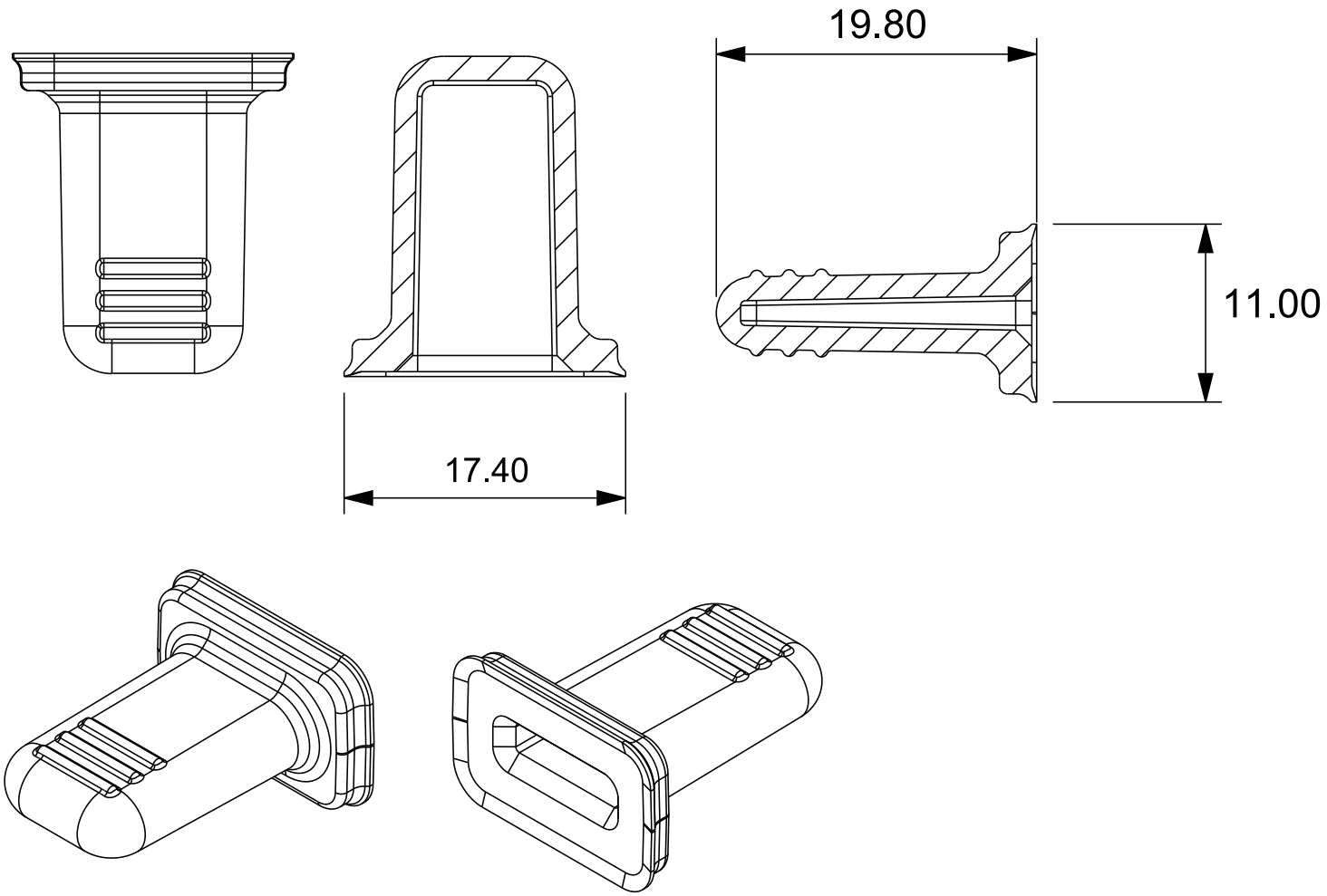

RELATED PRODUCTS

ACCESSORY

Item No: DTPF12

Required: No

Description: NHP DIN-T Accessory Pole Filler 12Pole Strip 216mm equals 24 x 9mm Segments

Item No: GBBBC

Required: No

Description: NHP POWERMAX GB Isolation Busbar Chassis Accessory Busbar Cap

Published on 24 June 2026