FMB01DW24

Carlo Gavazzi Timer Relays 11Pin Multifunction 12-240VACDC Supply 2 CO 0.05 Seconds 300 Hours

TIME DELAY RELAYS

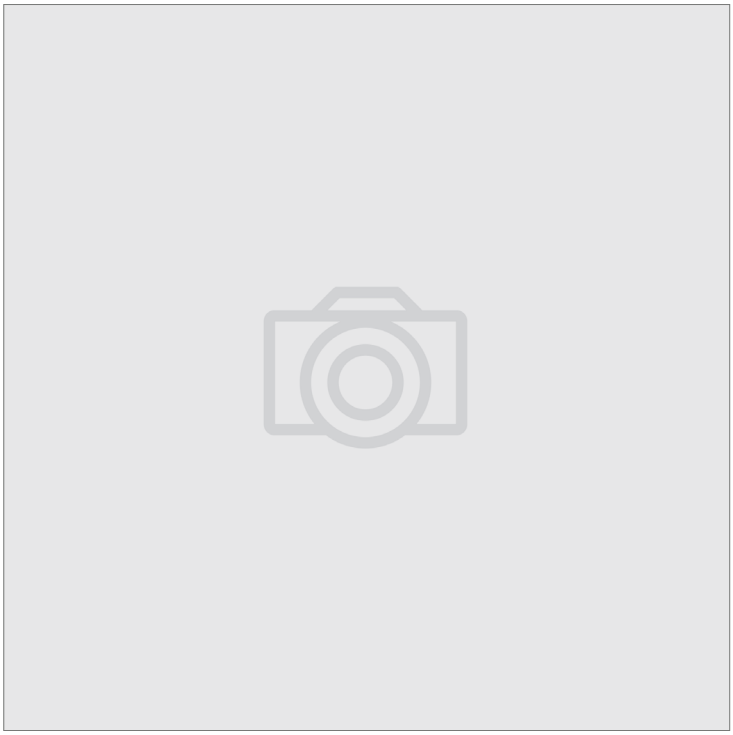

Component type	Timer relay
Range	Timer Relays
Model	N/A
Product status	Discontinued

The Carlo Gavazzi Timers are ideal in a wide range of applications in automation, such as motor control centres, packaging machinery, HVAC equipment, control panels and process control systems. The range offers solutions for various functions, mountings, and output type.

ELECTRICAL

Voltage type for actuating	AC/DC
Rated control supply voltage Us at DC	12-240 V
Rated control supply voltage Us at AC 60HZ	12-240 V
Rated control supply voltage Us at AC 50HZ	12-240 V
Number of outputs, delayed, change-over contact	1
Type of electric connection	Screw connection
Function delay-on energization	No
Function delay on de-energization	No
Function floating contact on energization	No
Function floating contact on de-energization	No
Function star-delta	No
Function pulse shaping	No
Function flashing, starting with pause, fixed time	No
Function flashing, starting with pulse, fixed time	No
Clock function, starting with pause, variable	Yes
Clock function, starting with pulse, variable	Yes
Time range	0.05-1080000 s
Time setting accuracy	5 %
Power supply reset time	50 ms
Power consumption	0.5 VA
Electrical lifespan (control contacts)	200000 c (contacts)

MECHANICAL

Suitable for DIN rail (top hat rail) mounting	Yes
Mechanical lifetime (control contacts)	3.0E7 c (contacts)
Max. shock acceleration	50 g

Published on 03 November 2026

FMB01DW24

Carlo Gavazzi Timer Relays 11Pin Multifunction 12-240VACDC Supply 2 CO 0.05 Seconds 300 Hours

TIME DELAY RELAYS

MECHANICAL	Max. vibration acceleration	4 m/s²
	Max. vibration frequency, operational	100 Hz
DIMENSIONS	Height	80 mm
	Depth	109 mm
	Width	22.5 mm
ENVIRONMENT	Operating temperature	-25…45 °C

DIMENSIONAL DIAGRAM

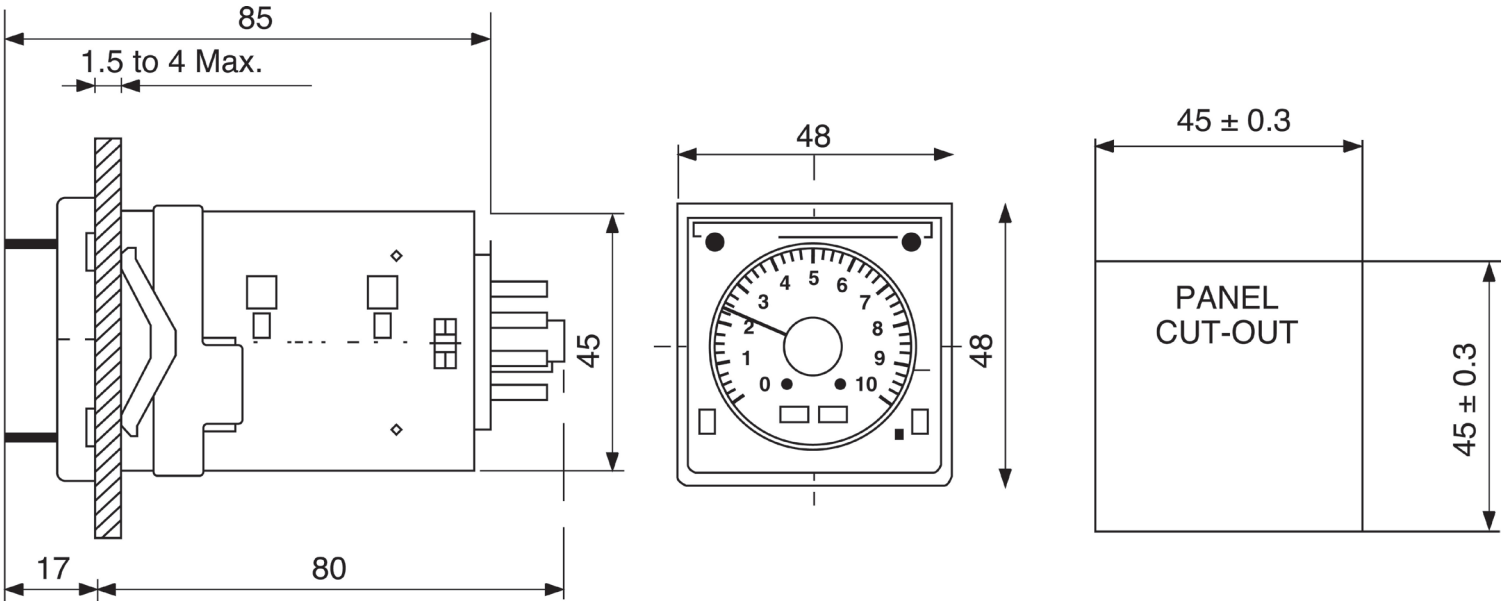

Published on 03 November 2026