ELBPM253P

NHP ELB Enclosed Load Break Switch, IP 65 Polycarbonate Grey, 3 Pole 25A

ENCLOSED ISOLATORS

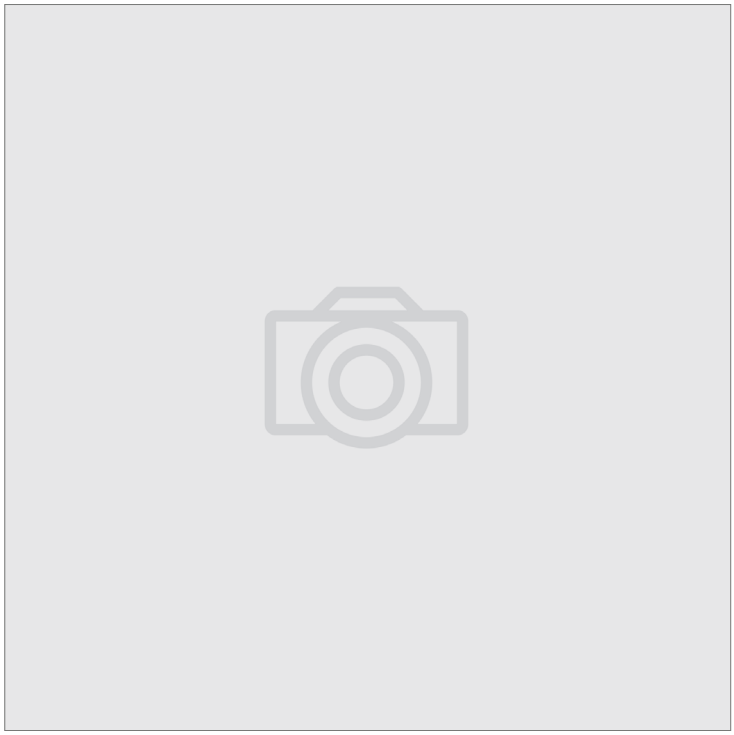

Component type	Switch disconnector
Range	ELB
Model	N/A
Product status	Phased Out

Socomec enclosed load break (ELB) switches range from 315A up to 800A and utilise IP66 powder-coated grey (RAL 7035) mild steel enclosures, suitable for indoor installations requiring chemical resistance and mechanical performance. The spacious enclosure allows for easy connection to Socomec's 3 pole load break switch, and comes with earth terminals, switch terminal cover, and shrouds.

ELECTRICAL	Rated uninterrupted current Iu	25 A
	Number of poles	3
	Rated operation power at AC-23, 400 V	11 kW
	Rated operation current Ie at AC-23a, 400 V	25 A
CONSTRUCTION	Material housing	Plastic
	Colour control element	Other
	Degree of protection (IP), front side	IP65
DIMENSIONS	Height	162 mm
	Width	99 mm
	Depth	92 mm

Published on 02 November 2026

ELBPM253P

NHP ELB Enclosed Load Break Switch, IP 65 Polycarbonate Grey, 3 Pole 25A

ENCLOSED ISOLATORS

DIMENSIONAL DIAGRAM

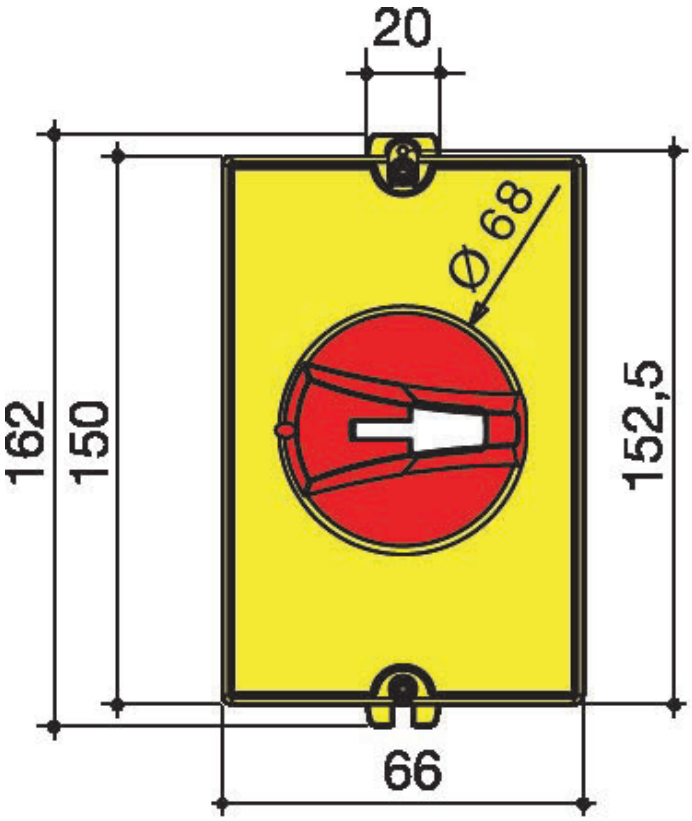

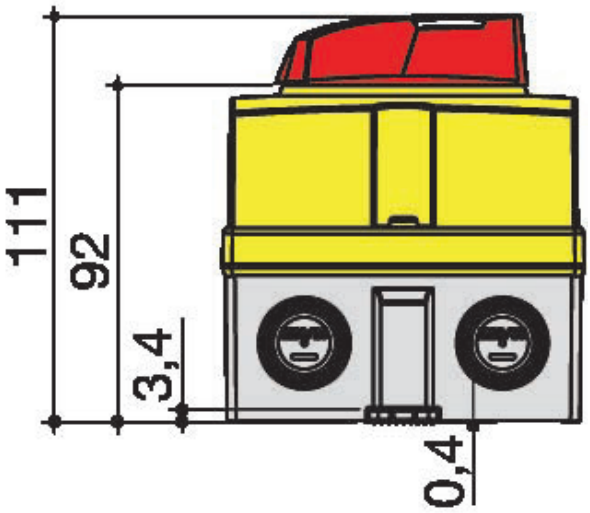

Published on 02 November 2026