DTALDTPK

NHP DIN-T LOCKDIN MCB/RCBO LH DTM6, 10, DC, 6RL & RL Pack Qty 10

DIN-T™
MINIATURE CIRCUIT BREAKERS

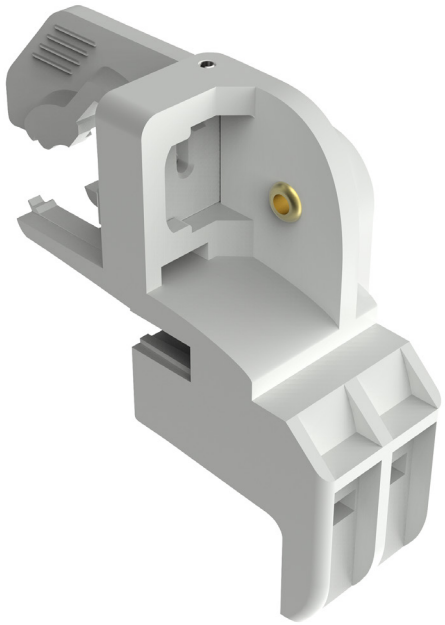

Component type	Locking device for switches
Range	MCB/RCD General Accessories
Model	N/A
Product status	Existing

NHP MCB/RCDs offer a wide range of high-quality accessories that are specifically designed to suit the NHP range.

CONSTRUCTION

Compatible product series	DIN-T
Locking in ON position	No
Locking in OFF position	Yes
Sealable	Yes

RELATED PRODUCTS

ACCESSORY

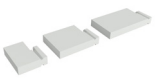

Item No: DTALBAX
Required: No
Description: NHP DIN-T LOCKDIN Auxliary Filler 9mm, 18mm, 27mm Pack Qty 10 each



Item No: DTALBPK
Required: No
Description: NHP DIN-T LOCKDIN Blank Module DTM6, 10, DC, 6RL & RL Pack Qty 10



Item No: DTALPF
Required: No
Description: NHP DIN-T Accessory Pole Filler to suit 63mm 3P Strip 54mm 6x9mm Segments

Published on 17 June 2026