D7MJR2

Sprecher and Schuh D7 Toggle Switch 22.5 mm Metal 2 Position Momentary

PUSHBUTTON AND PILOT LIGHTS



Component type	Front element for selector switch
Range	D7
Model	N/A
Product status	Existing

The Sprecher + Schuh D7 line of operator control devices is a diverse range of 22.5mm mount pushbuttons, pilot lights, selector switches, and emergency stops, ideal for use in applications requiring reliable performance. Modular design allows for easy configuration and assembly. Available in plastic and metal types, optional accessories include enclosures, legend plates, padlocks, and colour caps.

MECHANICAL	Number of switch positions	2
	Switching function latching	No
	Spring-return	No
PHOTOMETRIC	Suitable for illumination	No
DIMENSIONS	Hole diameter	22.5 mm

Published on 02 October 2026

D7MJR2

Sprecher and Schuh D7 Toggle Switch 22.5 mm Metal 2 Position Momentary

PUSHBUTTON AND PILOT LIGHTS

DIMENSIONAL DIAGRAM

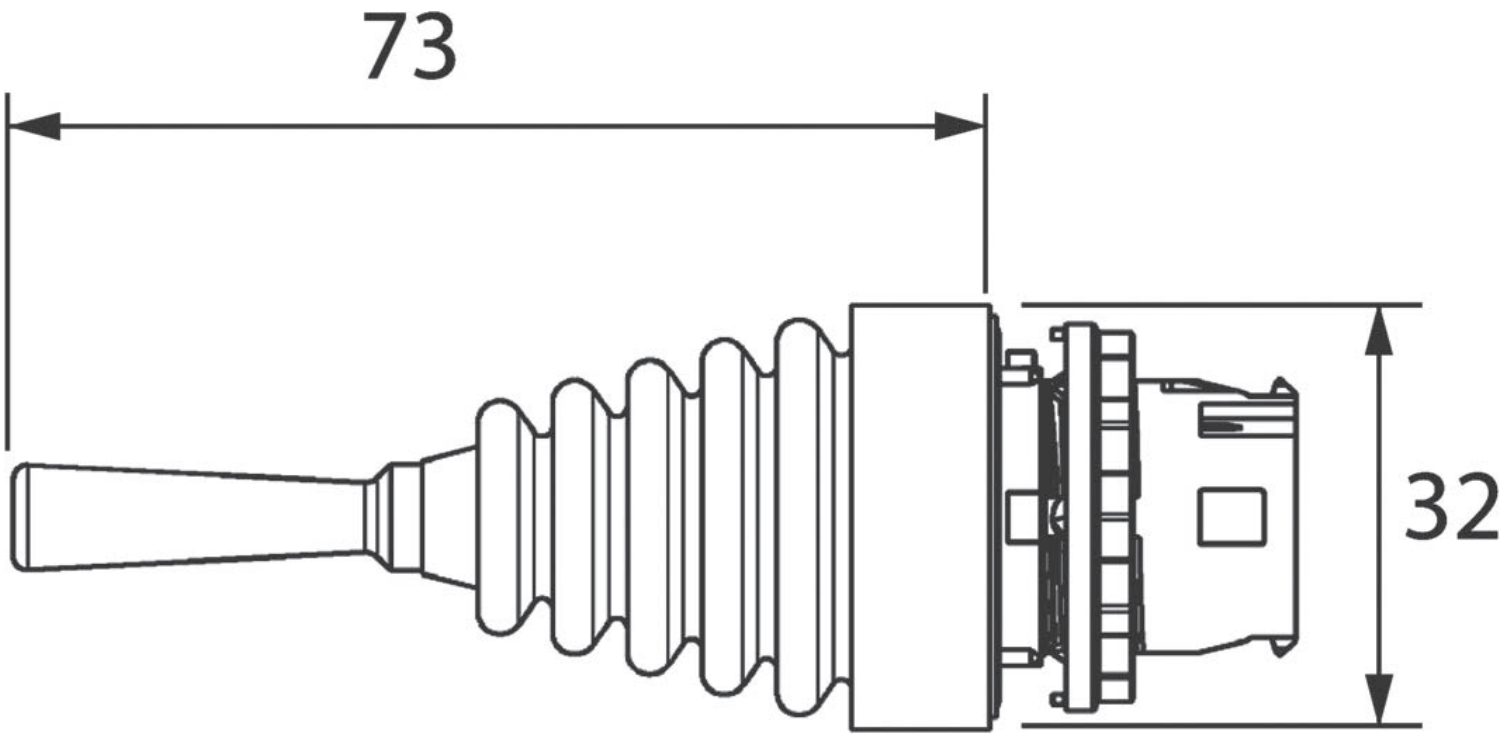

Published on 02 October 2026