CPR60G

NHP Concept Premier Panelboard 1080mm IP66 DIN-T 60 Way 250A No Main Switch Grey

Component type	Small distribution board
Range	Concept Premier
Model	N/A
Product status	Existing

The Concept Premier Panelboard is a premium panelboard offering all the features of Concept Plus, but also includes additional features such as an IP66 rating, 3-point door locking, and a stainless steel option. The increased depth between escutcheon and door allows load break handles and locking devices to be fitted.

ELECTRICAL	Rated current In	250 A
	Number of outgoing ways	60
	Number of poles, 18mm pitch	60
	Max. rated operation voltage Ue AC	415 V
	Rated impulse withstand voltage Uimp	6 kV
	Rated insulation voltage Ui	500 V
	Neutral terminal block	Yes
	Neutral bar rated current	250 A
	Earthing terminal block	Yes
CONSTRUCTION	Spare DIN equipment space (poles)	18
	DIN-rail	Yes
	Material housing	Steel
	Material thickness	1.6 mm
	Colour	Grey
	IP rating	IP66
	Type of cover	Door
	Material thickness cover	1.6 mm
	Transparent cover/door	No
	With lock	Yes
	Mounting method	Surface mounted (plaster)
MECHANICAL	Impact strength	IK10
DIMENSIONS	Height	1080 mm
	Width	600 mm
	Depth	240 mm

Published on 12 October 2026

CPR60G

NHP Concept Premier Panelboard 1080mm IP66 DIN-T 60 Way 250A No Main Switch Grey

DIMENSIONAL DIAGRAM

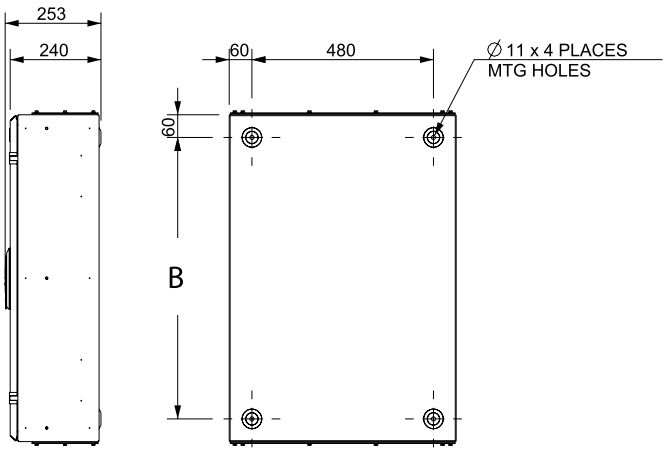

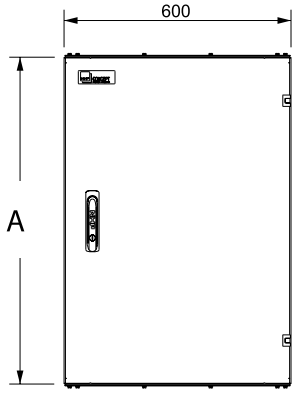

Module Size	A	B
2	432 mm	312 mm
3	648 mm	528 mm
4	864 mm	744 mm
5	1080 mm	960 mm
6	1296 mm	1176 mm
7	1512 mm	1392 mm
8	1728 mm	1608 mm
9	1944 mm	1824 mm

Plan view

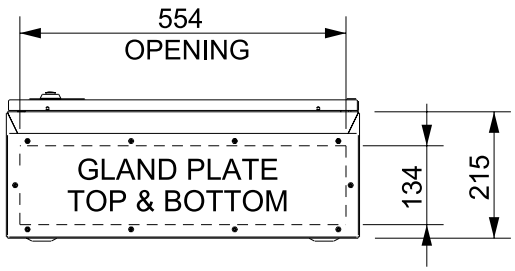

RELATED PRODUCTS

ACCESSORY

Item No: DA28400
Required: No
Description: STEGO Pressure Compensation Device Plastic M40 IP66 and X9K Qty 2

Item No: DA28420000
Required: No
Description: STEGO Pressure Compensation Device Plastic M40 IP66 Qty 1

Item No: DA28404000
Required: No
Description: STEGO Pressure Compensation Device Aluminium M12 IP67 Qty 1

Item No: DA28455
Required: No
Description: STEGO Pressure Compensation Device 303 Stainless M40 IP66 and X9K

Item No: DA28406
Required: No
Description: STEGO Pressure Compensation Device Plastic M12 IP66 and X9K Qty 2

Item No: DD084
Required: No
Description: STEGO Drainage Device Plastic IP66 and IP67 and IP69K M50

Published on 12 October 2026