# CPR48M160O

**NHP Concept Premier Panelboard 864mm IP66 DIN-T 48 Way 250A 160A Main Switch Orange**

| | |
|---|---|
| **Component type** | Small distribution board |
| **Range** | Concept Premier |
| **Model** | N/A |
| **Product status** | Existing |

The Concept Premier Panelboard is a premium panelboard offering all the features of Concept Plus, but also includes additional features such as an IP66 rating, 3-point door locking, and a stainless steel option. The increased depth between escutcheon and door allows load break handles and locking devices to be fitted.

| | | |
|---|---|---|
| **ELECTRICAL** | Rated current In | 250 A |
| | Number of outgoing ways | 48 |
| | Number of poles, 18mm pitch | 48 |
| | Max. rated operation voltage Ue AC | 415 V |
| | Rated impulse withstand voltage Uimp | 6 kV |
| | Rated insulation voltage Ui | 500 V |
| | Number of poles main switch | 3 |
| | Main switch rated current | 160 A |
| | Neutral terminal block | Yes |
| | Neutral bar rated current | 250 A |
| | Earthing terminal block | Yes |
| **CONSTRUCTION** | Spare DIN equipment space (poles) | 18 |
| | DIN-rail | Yes |
| | Material housing | Steel |
| | Material thickness | 1.6 mm |
| | Colour | Orange |
| | IP rating | IP66 |
| | Type of cover | Door |
| | Material thickness cover | 1.6 mm |
| | Transparent cover/door | No |
| | With lock | Yes |
| | Mounting method | Surface mounted (plaster) |
| **MECHANICAL** | Impact strength | IK10 |
| **DIMENSIONS** | Height | 864 mm |
| | Width | 600 mm |
| | Depth | 240 mm |

# CPR48M160O

**NHP Concept Premier Panelboard 864mm IP66 DIN-T 48 Way 250A 160A Main Switch Orange**

## DIMENSIONAL DIAGRAM

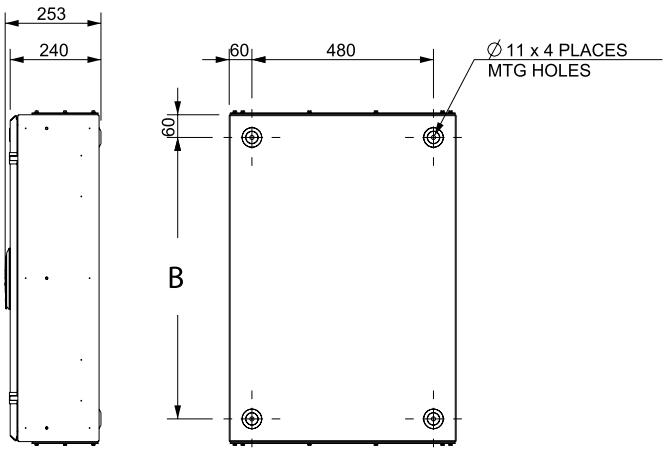


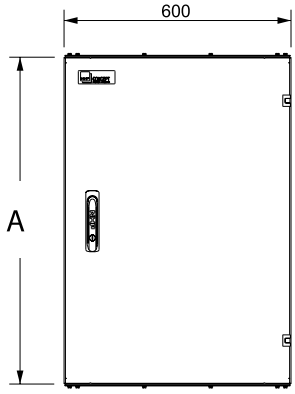


| Module Size | A | B |
|---|---|---|
| 2 | 432 mm | 312 mm |
| 3 | 648 mm | 528 mm |
| 4 | 864 mm | 744 mm |
| 5 | 1080 mm | 960 mm |
| 6 | 1296 mm | 1176 mm |
| 7 | 1512 mm | 1392 mm |
| 8 | 1728 mm | 1608 mm |
| 9 | 1944 mm | 1824 mm |

Plan view

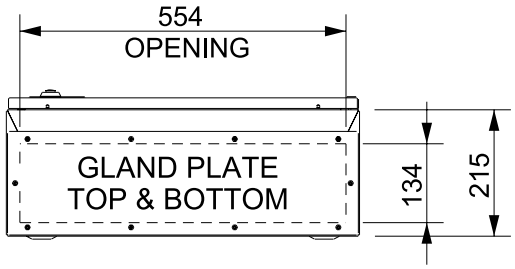


## RELATED PRODUCTS

### ACCESSORY

**Item No:** DA28400
**Required:** No
**Description:** STEGO Pressure Compensation Device Plastic M40 IP66 and X9K Qty 2

**Item No:** DA28420000
**Required:** No
**Description:** STEGO Pressure Compensation Device Plastic M40 IP66 Qty 1

**Item No:** DA28404000
**Required:** No
**Description:** STEGO Pressure Compensation Device Aluminium M12 IP67 Qty 1

**Item No:** DA28455
**Required:** No
**Description:** STEGO Pressure Compensation Device 303 Stainless M40 IP66 and X9K

**Item No:** DA28406
**Required:** No
**Description:** STEGO Pressure Compensation Device Plastic M12 IP66 and X9K Qty 2

**Item No:** DD084
**Required:** No
**Description:** STEGO Drainage Device Plastic IP66 and IP67 and IP69K M50



Published on 12 October 2026