BCO16004PMB

Socomec BCO Manual Transfer Switch kit - UPS Bypass M.B, w/ External Handle (I I+II II), 4P 1600A

MANUAL TRANSFER SWITCHES

Component type	AC transfer system
Range	BCO Changeover
Model	N/A
Product status	Existing

The BCO Bypass changeover switches are a combination of three interlocked switches enabling 3+6 or 4+8 pole configurations for bypass applications. For overlapping contact switching (I-I+II-II), this configuration provides bypass to a UPS or other devices when sources are synchronised and the UPS is in static bypass mode. Available from 125 to 1600A.

ELECTRICAL	Rated current In	1600 A
	Number of poles	4-pole
	Rated insulation voltage Ui	1000 V
	Rated impulse withstand voltage Uimp	12 kV
	Rated operation current Ie at AC-23, 400 V	1250 A
	Rated operation current Ie at AC-23a, 690 V	500 A
	Rated operation current Ie at DC-23, 220 V	1250 A
CONSTRUCTION	IP rating	IP20
DIMENSIONS	Height	288 mm
	Width	598 mm
	Depth	479 mm
ENVIRONMENT	Ambient temperature	-20…40 °C

Published on 05 August 2026

BCO16004PMB

Socomec BCO Manual Transfer Switch kit - UPS Bypass M.B, w/ External Handle (I I+II II), 4P 1600A

MANUAL TRANSFER SWITCHES

DIMENSIONAL DIAGRAM

SIRCOVER bypass 125 to 1600 A

Direct front operation

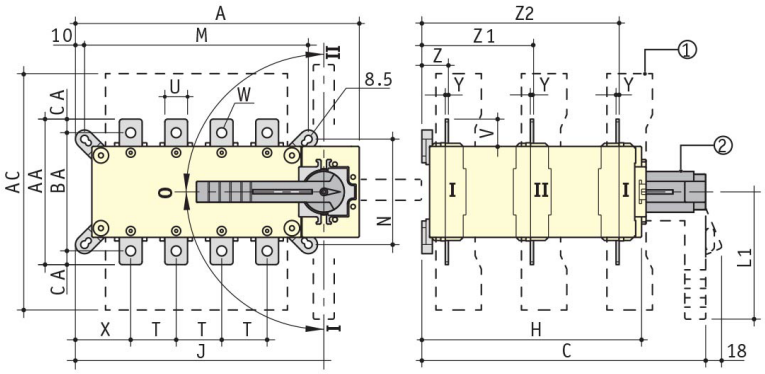

1. Terminal shrouds
2. Direct operation handle:
   - 125 to 200 A: L1 = 140 mm
   - 250 to 630 A: L1 - 210 mm
   - 800 to 1600 A: L1 = ø 330 mm

External front operation

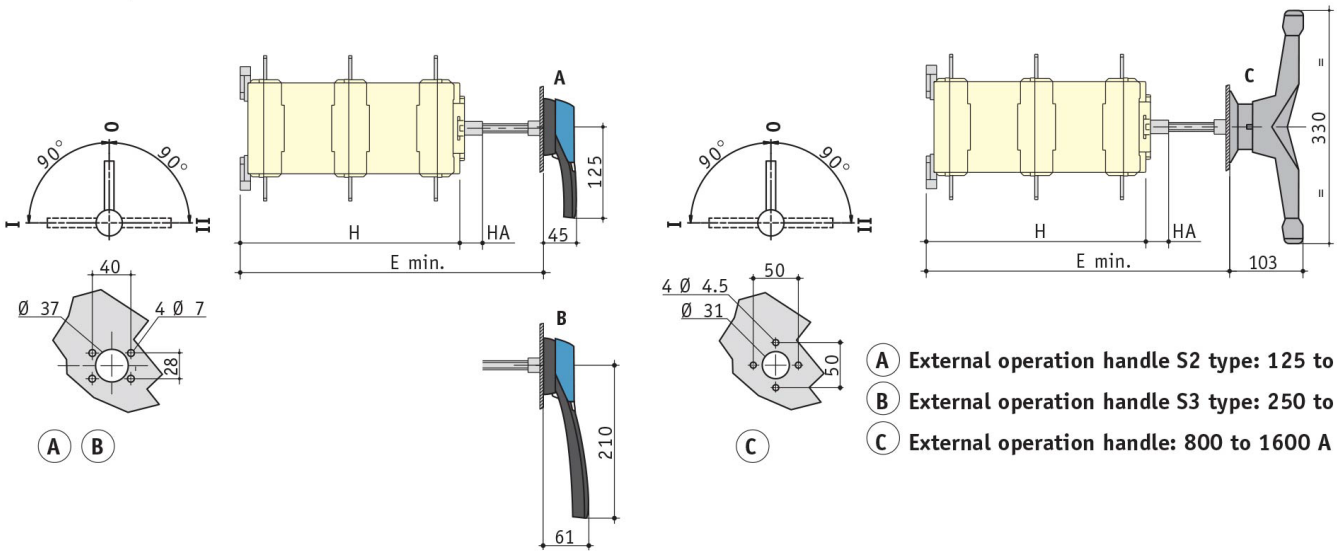

A External operation handle S2 type: 125 to 200 A

B External operation handle S3 type: 250 to 630 A

C External operation handle: 800 to 1600 A

Rating (A)	Overall dimensions (mm) A 3P	A 4P	C	E min.	Terminal shrouds AC	H	HA	Switch body J 3P	J 4P	Switch mounting M 3P	M 4P	N	T	U	V	W	Connection terminals X 3P	X 4P	Y	Z	Z1	Z2	AA	BA	CA
125	221	251	313	320	235	243	25	182	212	156	186	101	36	20	25	8.5	56	50	3.5	28	124	219	135	115	10
160	221	251	313	320	235	243	25	182	212	156	186	101	36	20	25	8.5	56	50	3.5	28	124	219	135	115	10
200	221	251	313	320	235	243	25	182	212	156	186	101	36	20	25	8.5	56	50	3.5	28	124	219	135	115	10
250	262	312	313	298	280	243	25	223	273	196	246	116	50	25	30	11	61	61	3.5	30	124	219	160	130	10
400	262	312	313	298	280	243	25	223	273	196	246	116	50	35	35	11	61	61	3.5	30	124	219	170	140	15
500	319	379	432	417	401	362	25	272	332	246	306	176	65	32	37	13	70.5	65.5	5	43	180	317	235	205	15
630	319	379	432	417	400	362	25	272	332	246	306	176	65	45	50	13	70.5	65.5	5	43	180	317	260	220	20
800	386	466	560	550	459	479	29	306.5	386.5	255	335	250	80	50	60.5	15	48	48	7	66.5	253.5	439.5	321	–	26.5
1250	386	466	560	550	459	479	29	306.5	386.5	255	335	250	80	60	65	16x11	48	48	7	66.5	253.5	439.5	320	–	29.25
1600	478	598	560	550	461	479	29	388.5	518.5	347	467	250	120	90	43.5	12.5x5	54	54	8	66.5	253.5	439.5	288	–	15

Published on 05 August 2026

RELATED PRODUCTS

ACCESSORY

Item No: 14433114

Required: No

Description: Socomec BCO Handle - Ext. Mount S4, IP 65, P/lock, BL/BK, Eng."I I+II II", suits 800 to 1600A

Item No: 41090021

Required: No

Description: Socomec BCO/SCO Auxiliary Contact 1 N.O + 1 N.C, suits 125 - 1600A (QTY 2)

Item No: 41090160

Required: No

Description: Socomec ATyS/BCO/SCO Bridging Bar 1P, 1600A (QTY 1)