95534200

Socomec ATyS Automatic Transfer Switch - ATyS g, Basic Integrated Logic, 4 Pole 2000A

AUTOMATIC TRANSFER SWITCHES

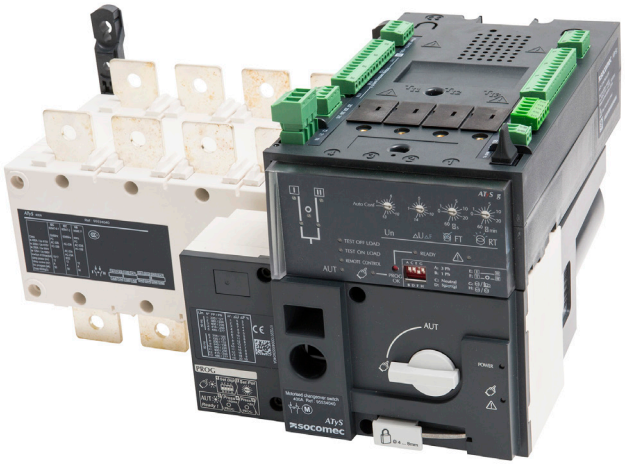

Component type	Switch disconnector
Range	ATyS Automatic
Model	N/A
Product status	Existing

The ATyS g and ATyS p are a range of 125A to 3200A automatic transfer switches enabling on-load changeover and monitoring between separate three-phase or single-phase sources, configured via potentiometers and DIP switches (ATyS g) or an integrated keypad and LCD display (ATyS p), designed for mains-mains and mains-genset applications. Optional plug-in communication and I/O modules available.

ELECTRICAL

Rated operating voltage Ue	1000 V
Max. rated operation voltage Ue AC	1000 V
Rated permanent current at AC-21, 400 V	2000 A
Rated control supply voltage Us at AC 50HZ	400-690 V
Rated uninterrupted current Iu	2000 A
Number of poles	4
Rated operation power at AC-23, 400 V	900 kW
Rated short-time withstand current Icw	50 kA
Type of control element	Other
Type of electrical connection of main circuit	Bolt connection
Rated operating voltage	400-690 V
Rated permanent current at AC-23, 400 V	1600 A
Switching power at 400 V	12800 kW
Number of auxiliary contacts as normally closed contact	0
Number of auxiliary contacts as normally open contact	3
Number of auxiliary contacts as change-over contact	4
Motor drive optional	No
Motor drive integrated	Yes
Voltage release optional	No

CONSTRUCTION

Device construction	Built-in device fixed built-in technique
Colour control element	Other
Degree of protection (IP), front side	IP20
Version as main switch	Yes
Version as maintenance-/service switch	Yes

Published on 04 August 2026

95534200

Socomec ATyS Automatic Transfer Switch - ATyS g, Basic Integrated Logic, 4 Pole 2000A

AUTOMATIC TRANSFER SWITCHES

CONSTRUCTION	Version as safety switch	Yes
	Version as emergency stop installation	No
	Version as reversing switch	Yes
	Number of switches	2
	Suitable for front mounting 4-hole	No
	Suitable for front mounting centre	No
	Suitable for distribution board installation	No
	Suitable for intermediate mounting	Yes
	Interlockable	Yes
MECHANICAL	Padlock locking	Yes
DIMENSIONS	Height	258 mm
	Width	716 mm
	Depth	521 mm
	Weight	78.7 kg

DIMENSIONAL DIAGRAM

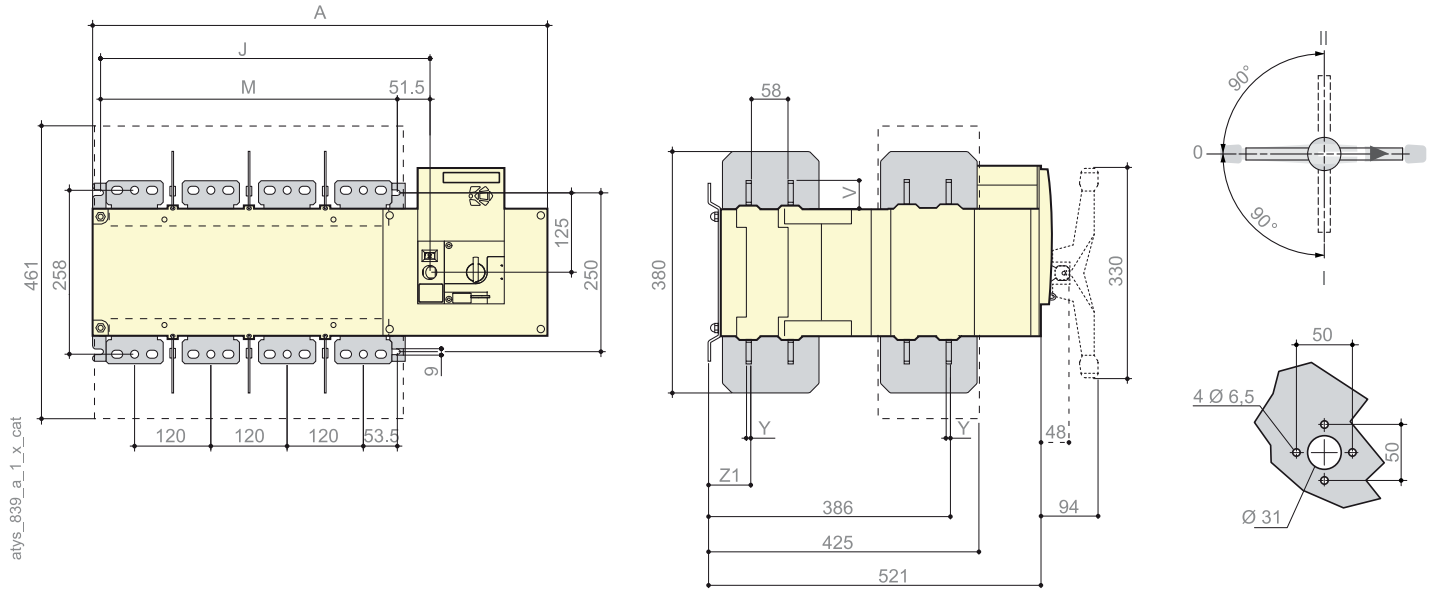

Rating (A)	Overall Dimensions	Terminal Shrouds	Switch Body				Switch Mounting		Connection						
	B	AC	A 3p.	A 4p.	J 3p.	J 4p.	M 3p.	M. 4p.	T	U	V	X	Y	Z1	AA
2000 ... 3200	380	531	596	716	399	519	347	467	120	90	44	53	8	67.5	288

Published on 04 August 2026