855BSS24RH4

Allen-Bradley 855BS Beacon 90mm Round Surface Mount Rotating Halogen 24V AC DC Full Voltage Red

BEACONS

Component type	Rotating beacon alarm luminaire
Range	Beacons
Model	N/A
Product status	Discontinued

The Allen-Bradley 855R series of round beacons are ideal for use in industrial signalling applications. Designed for fast, flexible, and easy installation with simple modular assembly while maintaining reliable performance. Available in 110mm diameter size utilising the latest LED technology with various colour, voltage and mounting options.

ELECTRICAL	**Operating voltage at AC 50 Hz**	24 V
	Operating voltage at AC 60 Hz	24 V
	Operating voltage at DC	24 V
	Electricity consumption	0.95 A
	Type of current	AC/DC
	Power	20 W
	Function	Rotating
CONSTRUCTION	**Colour of lamp hood**	Red
	IP rating	IP65
	Lamp holder	GY6.35
	Optics	Mirror
	Degree of protection (NEMA)	13
	Mounting method	Surface mounting
PHOTOMETRIC	**Lamp type**	Halogen

Published on 07 September 2026

855BSS24RH4

Allen-Bradley 855BS Beacon 90mm Round Surface Mount Rotating Halogen 24V AC DC Full Voltage Red

BEACONS

DIMENSIONAL DIAGRAM

Dimensions in millimeters (inches). Dimensions are not intended to be used for manufacturing purposes.

90 mm Beacon NPT Conduit Mount

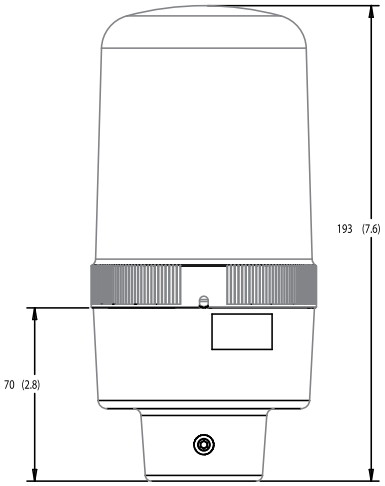

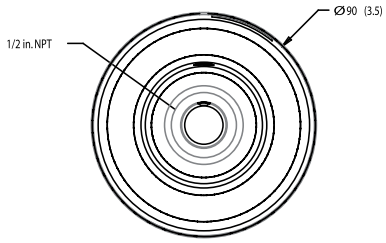

90 mm Beacon Surface Mount

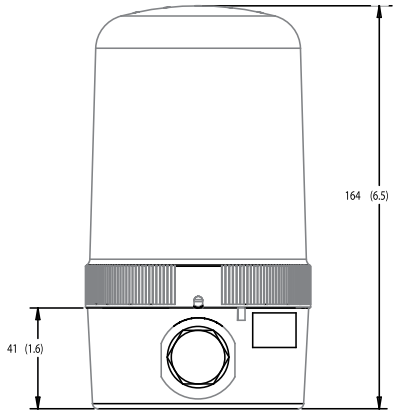

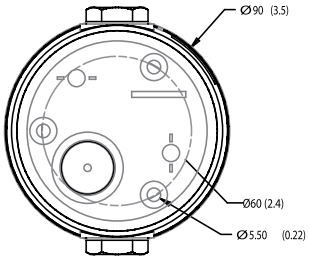

90 mm Beacon Tube Mount

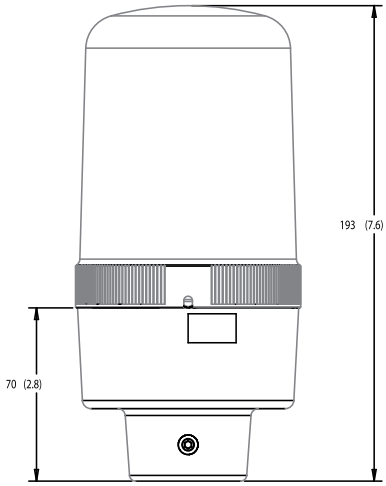

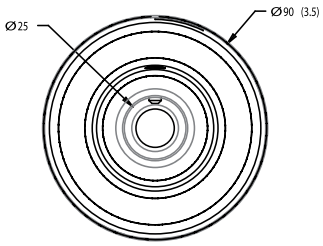

90 mm Beacon Vertical Bracket

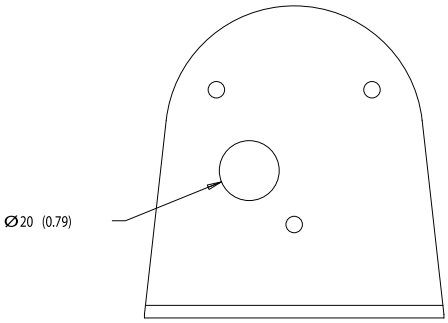

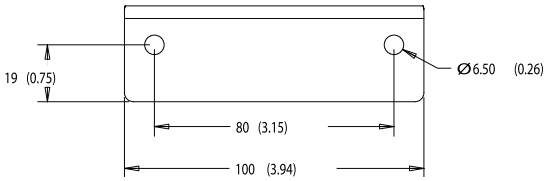

Published on 07 September 2026