855BSS20BL4

Allen-Bradley 855BS Beacon 90mm Round Surface Mnt LED Strobe Sel Single or Double Flash 240V AC Red

BEACONS

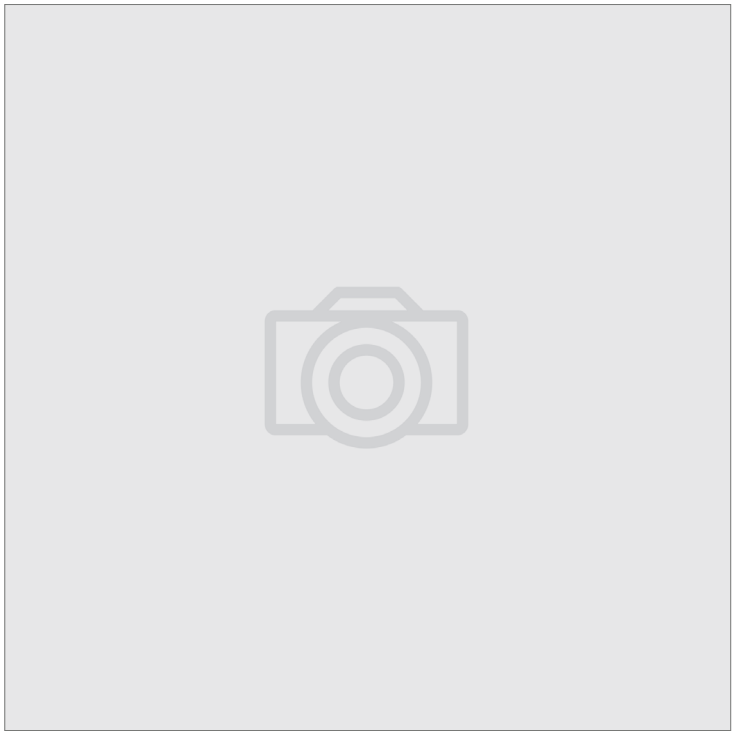

Component type	Rotating beacon alarm luminaire
Range	Beacons
Model	N/A
Product status	Discontinued

The Allen-Bradley 855R series of round beacons are ideal for use in industrial signalling applications. Designed for fast, flexible, and easy installation with simple modular assembly while maintaining reliable performance. Available in 110mm diameter size utilising the latest LED technology with various colour, voltage and mounting options.

ELECTRICAL	**Operating voltage at AC 50 Hz**	230 V
	Operating voltage at AC 60 Hz	240 V
	Electricity consumption	0.07 A
	Type of current	AC
	Function	Strobe
CONSTRUCTION	**Colour of lamp hood**	Red
	IP rating	IP65
	Degree of protection (NEMA)	13
	Mounting method	Surface mounting
PHOTOMETRIC	**Lamp type**	LED

Published on 07 September 2026

855BSS20BL4

Allen-Bradley 855BS Beacon 90mm Round Surface Mnt LED Strobe Sel Single or Double Flash 240V AC Red

BEACONS

DIMENSIONAL DIAGRAM

90 mm LED Beacon

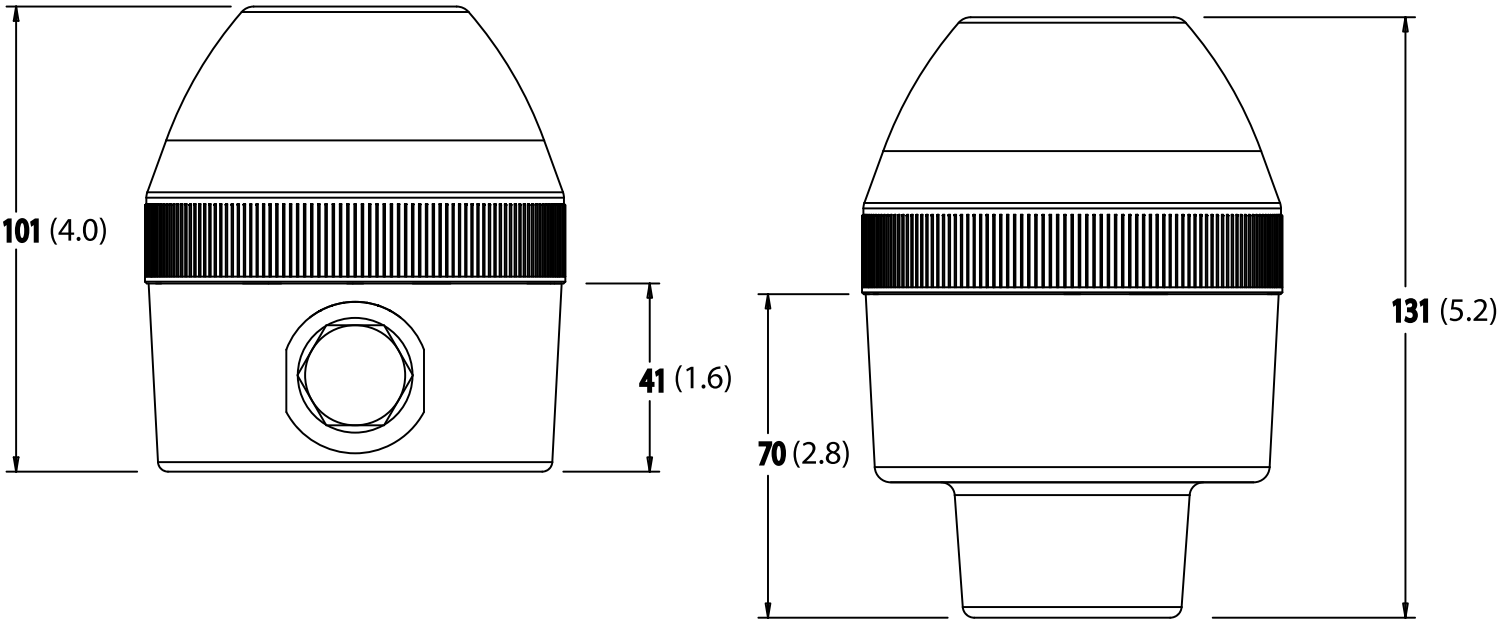

Published on 07 September 2026