# 855BLS20BR6

**Allen-Bradley 855BL Beacon 160mm Round Surface Mount Strobe 240V AC Full Voltage Blue**

BEACONS

| | |
|---|---|
| **Component type** | Rotating beacon alarm luminaire |
| **Range** | Beacons |
| **Model** | N/A |
| **Alternative** | CALL FOR ALTERNATIVE |

The Allen-Bradley 855R series of round beacons are ideal for use in industrial signalling applications. Designed for fast, flexible, and easy installation with simple modular assembly while maintaining reliable performance. Available in 110mm diameter size utilising the latest LED technology with various colour, voltage and mounting options.

| | | |
|---|---|---|
| **ELECTRICAL** | **Operating voltage at AC 50 Hz** | 230 V |
| | **Operating voltage at AC 60 Hz** | 240 V |
| | **Electricity consumption** | 0.35 A |
| | **Type of current** | AC |
| | **Function** | Strobe |
| **CONSTRUCTION** | **Colour of lamp hood** | Blue |
| | **IP rating** | IP65 |
| | **Optics** | Fresnel lens |
| | **Degree of protection (NEMA)** | 13 |
| | **Mounting method** | Surface mounting |
| **PHOTOMETRIC** | **Lamp type** | Other |



Published on 07 September 2026

# 855BLS20BR6

**Allen-Bradley 855BL Beacon 160mm Round Surface Mount Strobe 240V AC Full Voltage Blue**

BEACONS

## DIMENSIONAL DIAGRAM

Dimensions in millimeters (inches). Dimensions are not intended to be used for manufacturing purposes.

### 160 mm Beacon NPT Mount

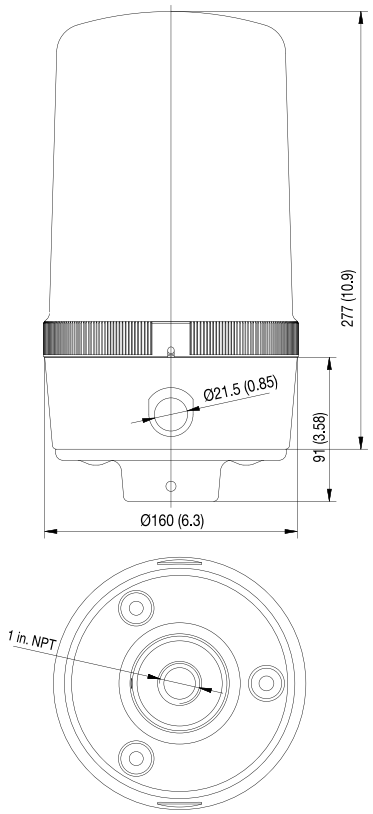


### 160 mm Beacon Surface Mount

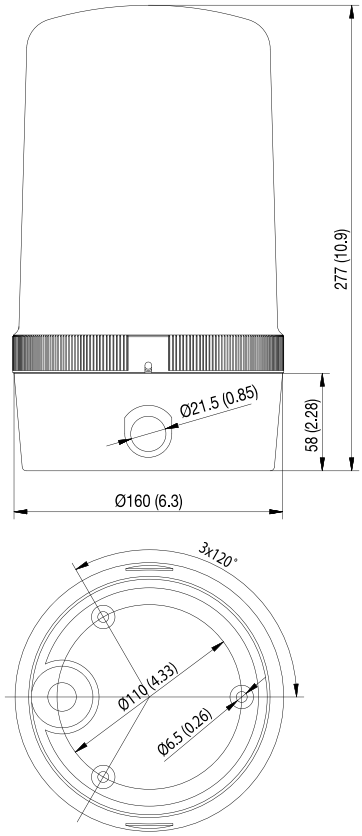


### 160 mm Beacon Tube Mount

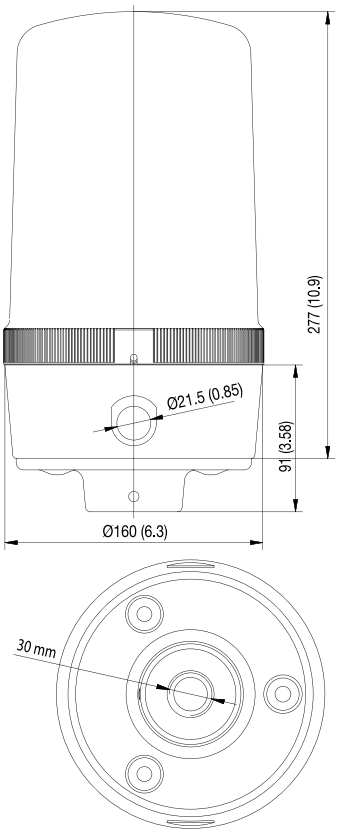


### 160 mm Beacon Vertical Bracket

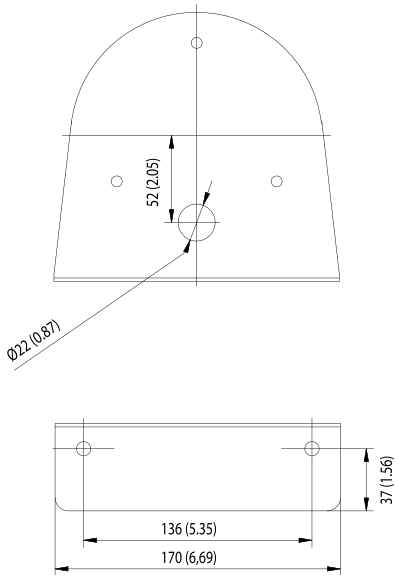






Published on 07 September 2026