855BLS20BR4

Allen-Bradley 855BL Beacon 160mm Round Surface Mount Strobe 240V AC Full Voltage Red

BEACONS

Component type	Rotating beacon alarm luminaire
Range	Beacons
Model	N/A
Product status	Discontinued

The Allen-Bradley 855R series of round beacons are ideal for use in industrial signalling applications. Designed for fast, flexible, and easy installation with simple modular assembly while maintaining reliable performance. Available in 110mm diameter size utilising the latest LED technology with various colour, voltage and mounting options.

ELECTRICAL	**Operating voltage at AC 50 Hz**	230 V
	Operating voltage at AC 60 Hz	240 V
	Electricity consumption	0.35 A
	Type of current	AC
	Function	Strobe
CONSTRUCTION	**Colour of lamp hood**	Red
	IP rating	IP65
	Optics	Fresnel lens
	Degree of protection (NEMA)	13
	Mounting method	Surface mounting
PHOTOMETRIC	**Lamp type**	Other

Published on 07 September 2026

855BLS20BR4

Allen-Bradley 855BL Beacon 160mm Round Surface Mount Strobe 240V AC Full Voltage Red

BEACONS

DIMENSIONAL DIAGRAM

Dimensions in millimeters (inches). Dimensions are not intended to be used for manufacturing purposes.

160 mm Beacon NPT Mount

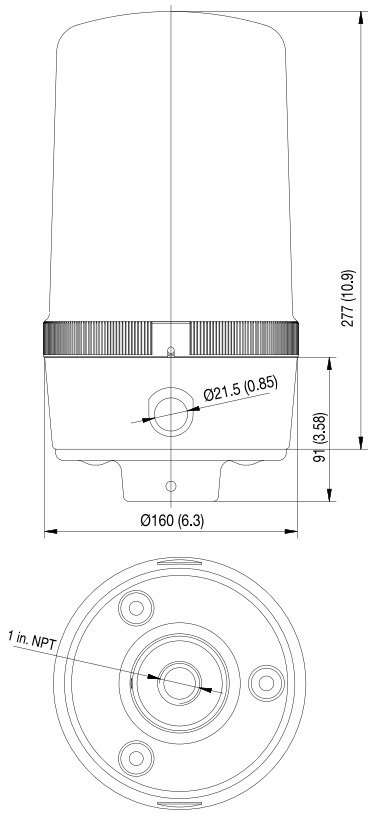

160 mm Beacon Surface Mount

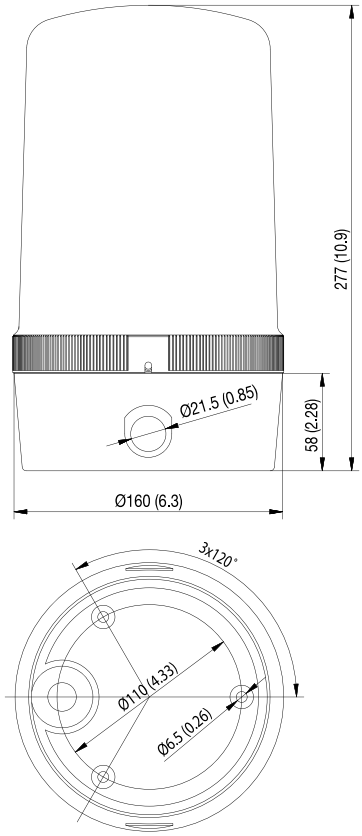

160 mm Beacon Tube Mount

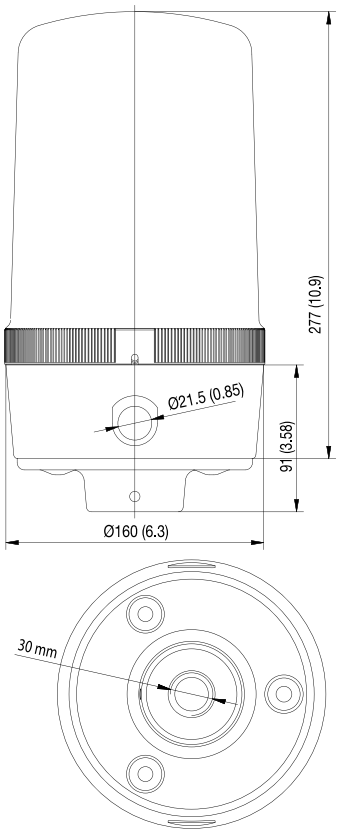

160 mm Beacon Vertical Bracket

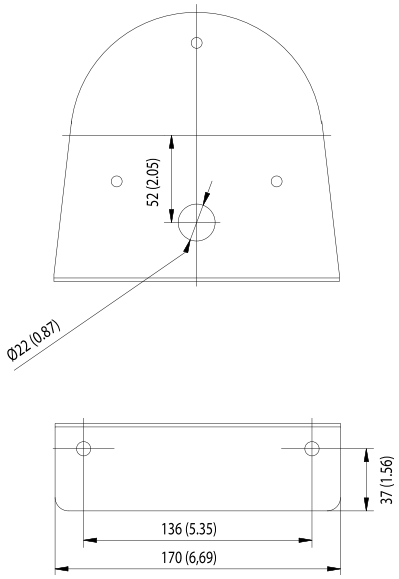

Published on 07 September 2026