800HCR1D1

Allen-Bradley 800H Pushbutton 30.5mm Complete PL FS Booted HD MOM 1NO Green N ILL

PUSHBUTTON AND PILOT LIGHTS



Component type	Push button, complete
Range	800T/H Pushbutton
Model	N/A
Product status	Existing

The Allen-Bradley 800T/H range of 30.5mm mount operators are designed and constructed to perform in the most demanding industrial environments. The range includes pushbuttons, selector switches, emergency stops, pilot lights. Available in both metal and plastic types with a modular design allowing for easy selection, configuration and assembly of components to form the operator control device.

ELECTRICAL	Number of contacts as normally open contact	1
	Number of contacts as normally closed contact	0
	Type of electric connection	Screw connection
CONSTRUCTION	Colour button	Green
	Type of button	Flush
	With front ring	Yes
	Material front ring	Plastic
	IP rating	IP65/IP66
MECHANICAL	Switching function latching	No
	Max. shock acceleration	100 g
	Max. vibration acceleration	10 m/s²
	Max. vibration frequency, operational	2000 Hz
PHOTOMETRIC	Suitable for illumination	No
DIMENSIONS	Hole diameter	30.5 mm
	Operator diameter	34.9 mm

Published on 30 September 2026

DIMENSIONAL DIAGRAM

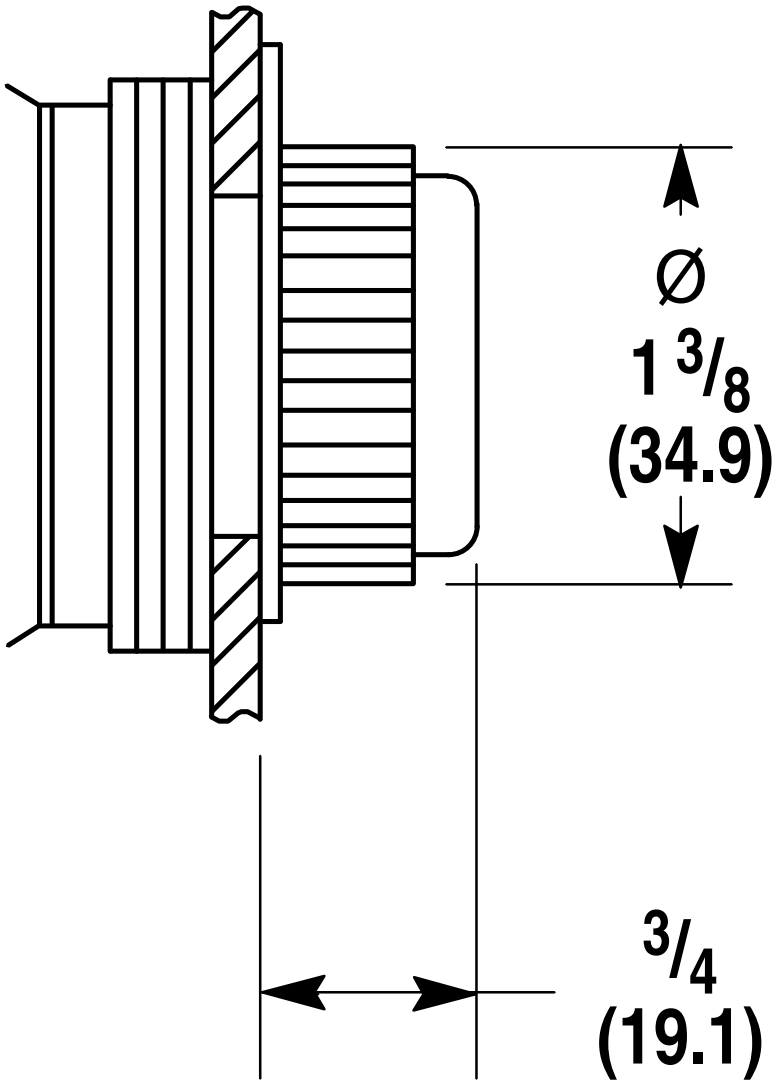

Booted Flush and Extended Head Momentary Contact Push Button Shipping Weight. 5-1/2 oz (0.16 kg)