800F34BE178

Allen-Bradley 800F Legend Plate 30 X 40mm, POWER ON, Black with White Text

PUSHBUTTON AND PILOT LIGHTS



Component type	Legend plate for control circuit devices
Range	800F Pushbutton
Model	N/A
Product status	Existing

The Allen-Bradley 800F line of operator control devices are a range of 22.5mm mount pushbuttons, pilot lights, selector switches, emergency stops for use in industrial applications requiring reliable performance. Available in plastic or metal types with a wide range of accessories including enclosures, legend plates, padlocks and colour caps making them suitable for use in various applications.

CONSTRUCTION	**Colour**	Black
	Meaning of the imprint	On
	Construction type	Flat
	Engravable	Yes
	Suitable for push button	Yes
	Suitable for illuminated push buttons	Yes
	Suitable for indicator light	Yes
	Suitable for mushroom head push button	Yes
	Suitable for signalling lamp	Yes
	Suitable for selector switch	Yes
DIMENSIONS	**Width**	29.8 mm
	Height	38.6 mm

Published on 20 October 2026

800F34BE178

Allen-Bradley 800F Legend Plate 30 X 40mm, POWER ON, Black with White Text

PUSHBUTTON AND PILOT LIGHTS

DIMENSIONAL DIAGRAM

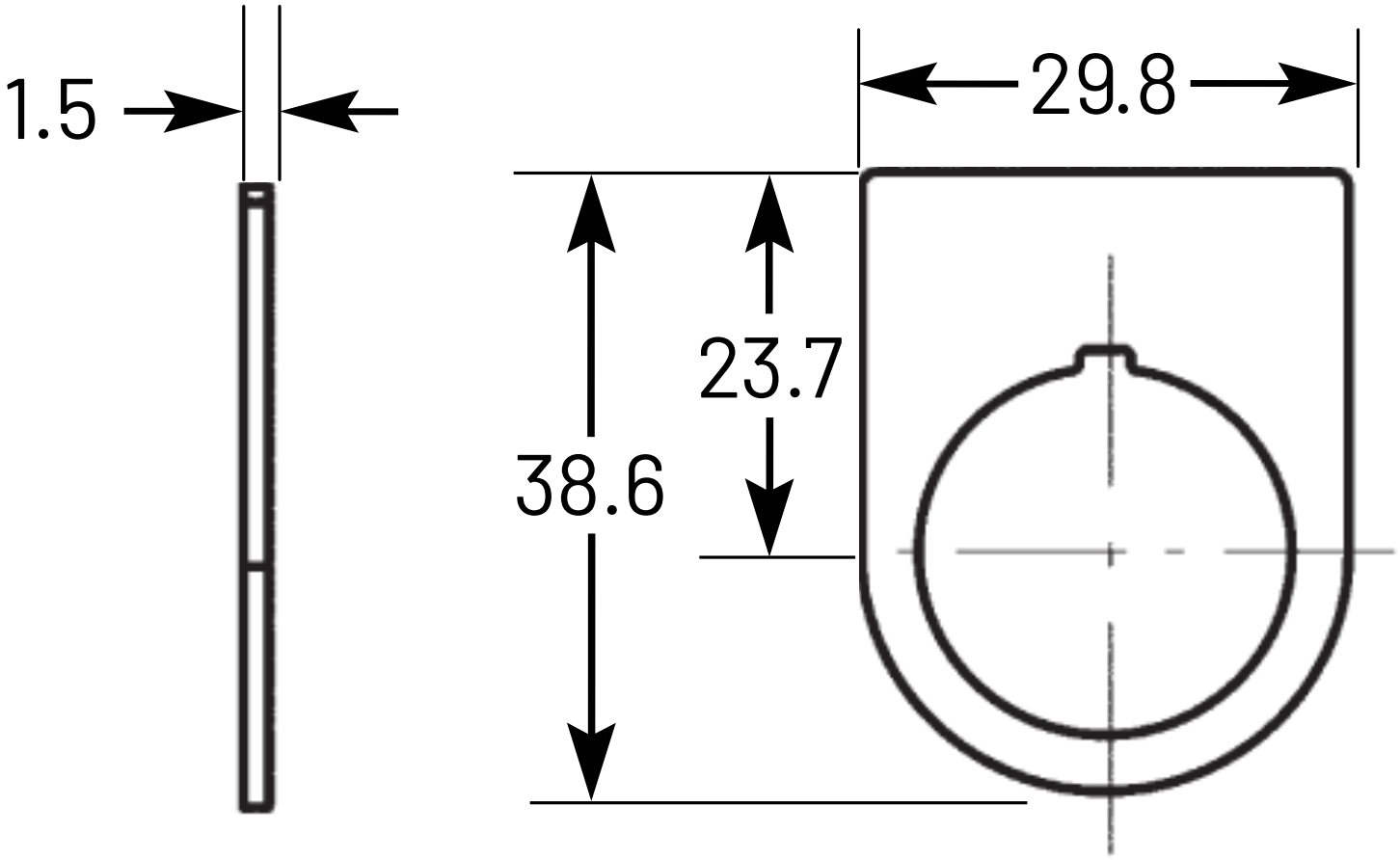

Dimensions are in millimeters.

Published on 20 October 2026