5094RTB32C

Allen-Bradley FLEX 5000 I/O Removable Terminal Block Detector 32 Output Screw

IN CABINET DISTRIBUTED IO

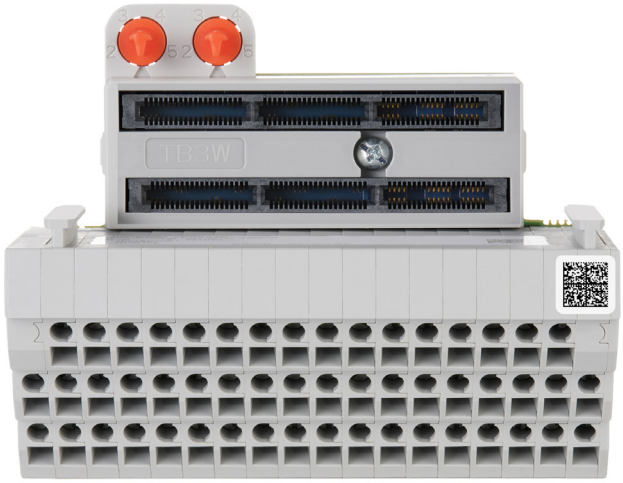

Component type	Accessories/spare parts for controls
Range	FLEX I/O
Model	N/A
Product status	Existing

The Allen-Bradley FLEX™ I/O system offers a flexible, modular, and cost-effective solution for your industrial automation and control. The space saving design offers rack-based I/O functionality of up to eight modules and provides digital, analogue, HART analogue, and specialty I/O with 4...32 points per module with flexible mounting and wiring options.

ELECTRICAL	**Type of electrical accessory/spare part**	Plug set
CONSTRUCTION	**Accessory**	Yes

Published on 19 November 2026

5094RTB32C

Allen-Bradley FLEX 5000 I/O Removable Terminal Block Detector 32 Output Screw

IN CABINET DISTRIBUTED IO

Allen-Bradley

DIMENSIONAL DIAGRAM

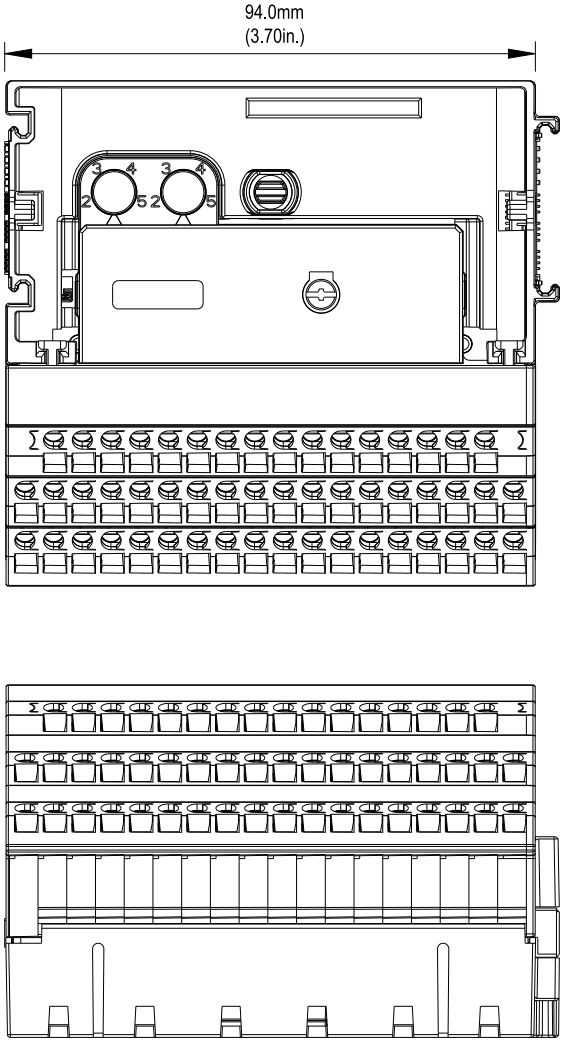

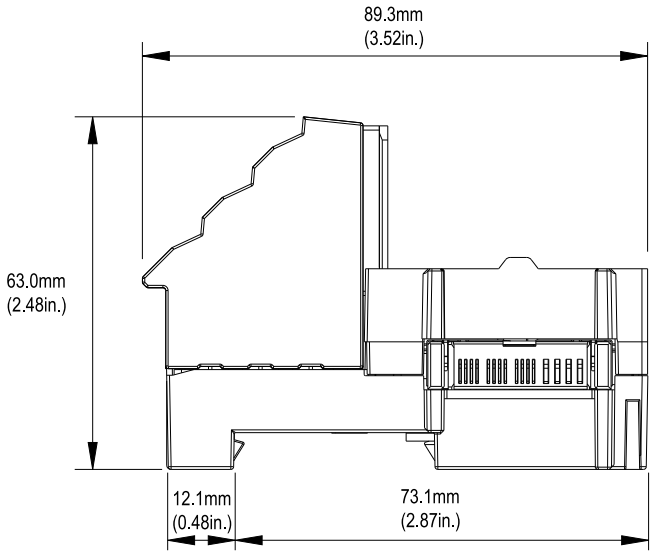

Published on 19 November 2026

5094RTB32C

Allen-Bradley FLEX 5000 I/O Removable Terminal Block Detector 32 Output Screw

IN CABINET DISTRIBUTED IO

Allen-Bradley

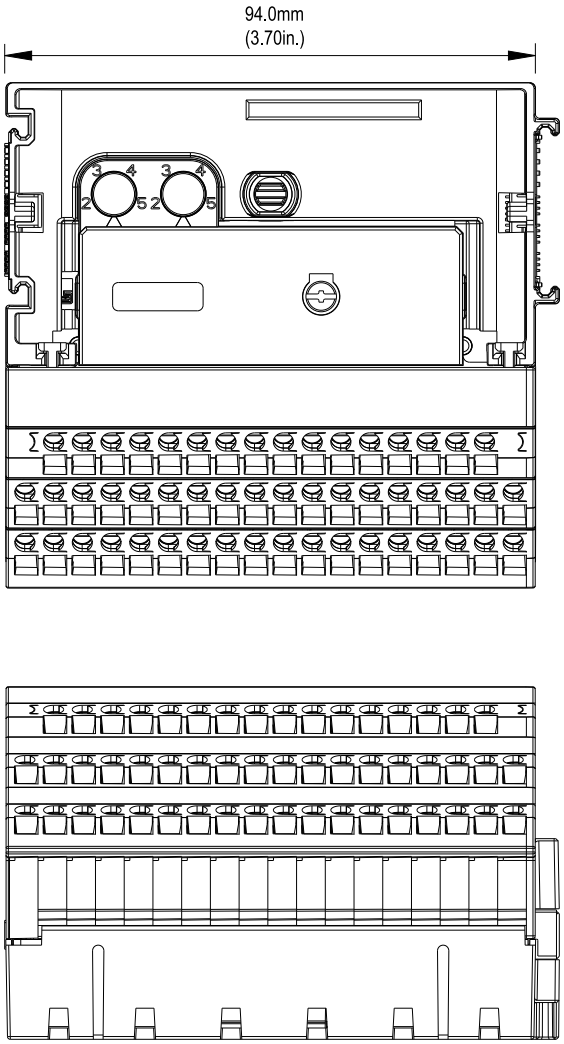

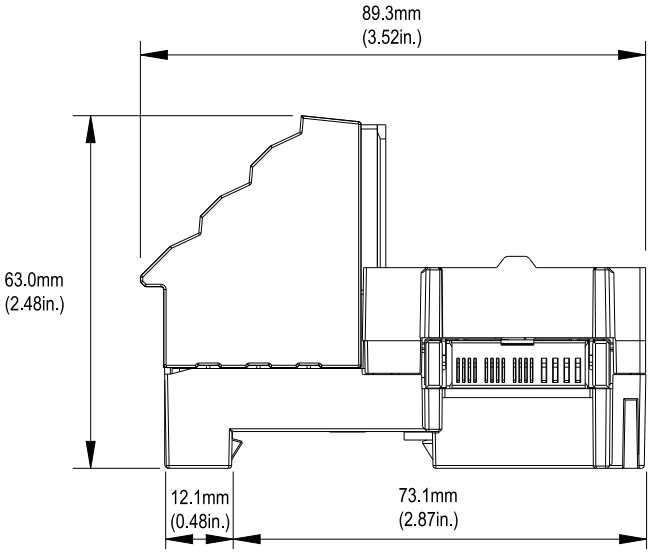

Published on 19 November 2026