4661007448VDC

Finder 46 Series Miniature Relay 16A 1 CO 48V DC Coil with PB plus LED plus Mech. Indicator

GENERAL PURPOSE RELAYS



Component type	Switching relay
Range	Panel Mount and Power Relay
Model	N/A
Product status	Existing

The Finder General Purpose Panel Mount and Power Relays are a reliable and efficient switching solution for various applications and industries. Options include coil voltages, output current ratings, contact configurations. A modular design allows for surge suppressors, coil indication and timers. Features manual override, push-to-test, slots for markers, jumpers and gold-plated contacts.

ELECTRICAL	Nominal current	16 A
	Nominal voltage AC	250 V
	Max. rated operation voltage Ue AC	440 V
	Number of contacts as change-over contact	1
	Drive, switching attitude	Mono stable
	Rated switching power at AC-1	4000 VA
	Rated switching power at AC-15, 230V	750 VA
	Breaking capacity at DC-1, 30V	12 A
	Breaking capacity at DC-1, 110V	0.5 A
	Voltage type for actuating	DC
	Control supply voltage Us at DC	48 V
	With LED indication	Yes
	Type of electric connection	Plug-in connection
	Electrical life at Un, In (service cycles)	100000 cycles
	Drive, polarization	Polarity free
	Type of switch contact	Single contact
	Material of contact insert	Thermoplastic
CONSTRUCTION	Material contact	Silver nickel
	With mechanical indicator	Yes
	With latching test button	Yes
	Suitable for plug-in socket mounting	Yes
MECHANICAL	Mechanical life (service cycles)	1.0E7 cycles
	Max. shock acceleration	20 g
	Max. shock duration	4 ms
	Max. vibration acceleration	20 m/s²
	Max. vibration frequency, operational	150 Hz

Published on 29 October 2026

4661007448VDC

Finder 46 Series Miniature Relay 16A 1 CO 48V DC Coil with PB plus LED plus Mech. Indicator

GENERAL PURPOSE RELAYS

DIMENSIONS	Width	12.4 mm
	Height	29 mm
	Depth	32.8 mm
ENVIRONMENT	Operating temperature	-40…70 °C

DIMENSIONAL DIAGRAM

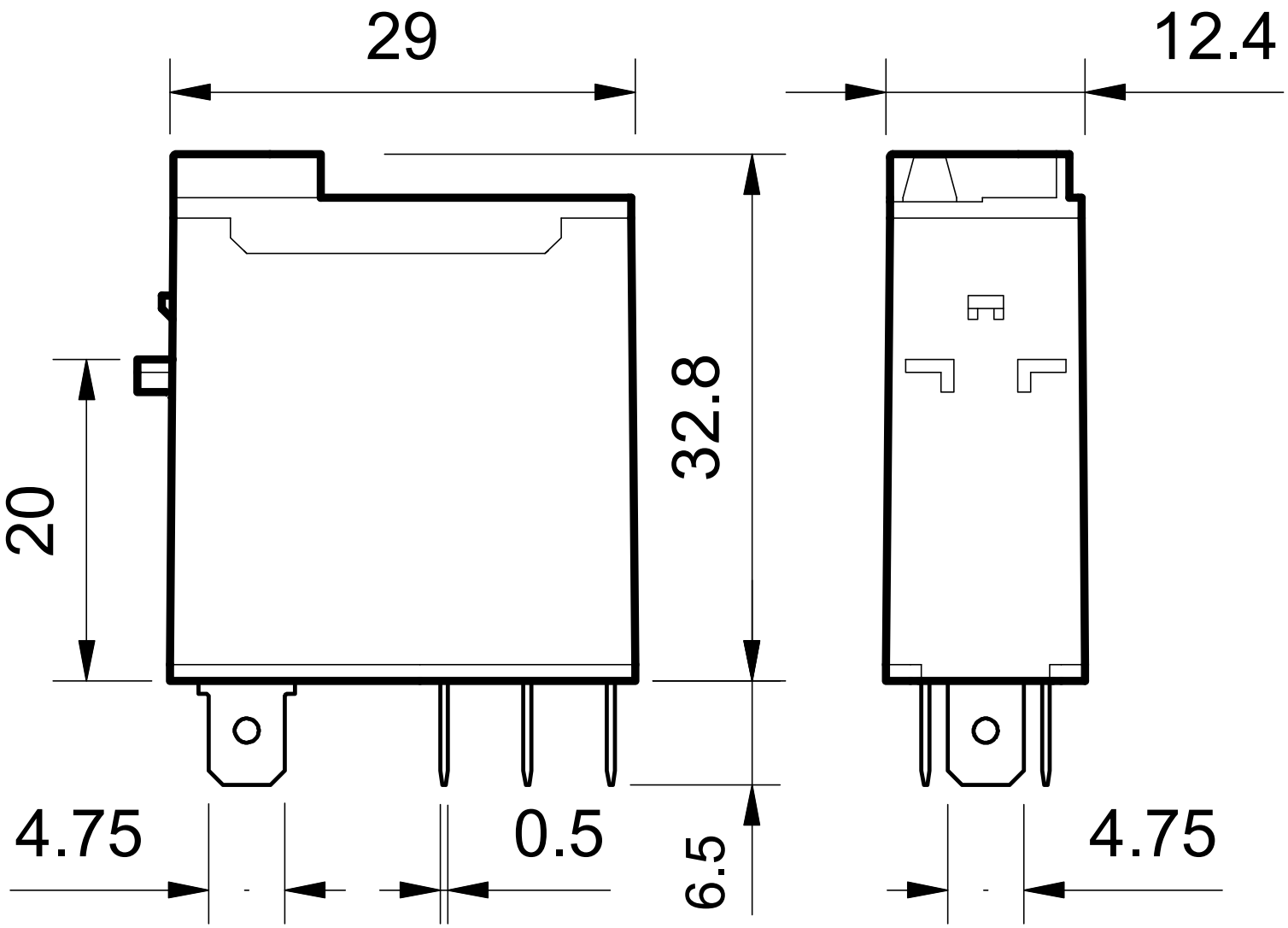

RELATED PRODUCTS

ACCESSORY

Item No: 09700
Required: No
Description: Finder 97 Series Card Holder for Push In 94/95/97 Series

Item No: 09701
Required: No
Description: Finder 97 Series Retaining Clip for 9701

4661007448VDC

Finder 46 Series Miniature Relay 16A 1 CO 48V DC Coil with PB plus LED plus Mech. Indicator

GENERAL PURPOSE RELAYS

RELATED PRODUCTS

ACCESSORY

Item No: 09758
Required: No
Description: Finder 97 Series 8 Way Jumper Link for Push In 94/95/97 Series



Item No: 8630240VAC
Required: No
Description: Finder 86 Series Bifunction Timer Module 240V AC



Item No: 863024VACDC
Required: No
Description: Finder 86 Series Bifunction Timer Module 12 to 24V AC DC

Item No: 95004
Required: No
Description: Finder 90 Series ID Tag 9503 and 9505 Bases

Item No: 9518
Required: No
Description: Finder 90 Series Jumper Link for 9505 and 9701 9702 Base 8 Way

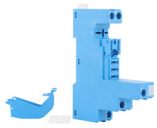

Item No: 9701
Required: No
Description: Finder 90 Series Base for 4661 Relay Box Clamp with Plastic Clip



Item No: 99020024
Required: No
Description: Finder 99 Series Green LED Module 6 to 24V AC DC



Item No: 9902002409
Required: No
Description: Finder 99 Series RC Module for Relay 6 to 24V AC DC



Item No: 9902002498
Required: No
Description: Finder 99 Series Green LED plus Varistor Module 6 24V AC DC



Item No: 99023000
Required: No
Description: Finder 99 Series Diode Module Standard Polarity 6 to 220V DC



Item No: 99029024
Required: No
Description: Finder 99 Series Green LED plus Diode Module Standard Polarity 6 to 24V DC

Published on 29 October 2026