440TMRPSE11GB

AB 440T Prosafe Rotary Trapped Key Interlock Rotary Switch Panel Mounted 20A 2NO 2NC Key Code GB

KEY EXCHANGE INTERLOCKS



Component type	
Range	440T Prosafe Rotary Trapped Key
Model	N/A
Product status	Existing

The Allen-Bradley 440T Rotary Trapped Key Interlock Switches are designed for electrical isolation of machinery, improving safe access and also as teach boxes in robot cells. After disconnection of power, the key can be withdrawn and used in the next operational sequence, such as unlocking an access hatch or operation of valves. Available as either panel mounted or purchased in an enclosure.

Published on 19 November 2026

440TMRPSE11GB

AB 440T Prosafe Rotary Trapped Key Interlock Rotary Switch Panel Mounted 20A 2NO 2NC Key Code GB

KEY EXCHANGE INTERLOCKS

DIMENSIONAL DIAGRAM

RPSE10 and RPSE11 [mm (in.)]

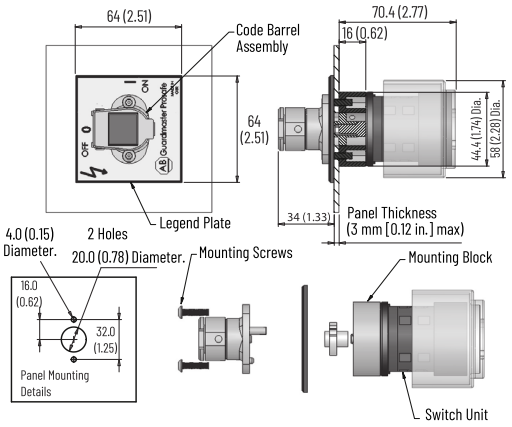

Published on 19 November 2026