440NZ21SS2JN

Allen-Bradley 440N SensaGuard Rectangular w/Act Mar Ind Mag Hold DC Micro 5

NON-CONTACT INTERLOCKS



Component type	Magnetic proximity switch
Range	440N SensaGuard
Model	N/A
Product status	Existing

The Allen-Bradley Sensaguard Non-Contact switches feature RFID technology for coding, inductive technology for sensing and combine a large sensing range with optimal operation and a generous tolerance to misalignment. An ideal cost-effective solution that is suited to a wide range of safety applications and is intended for use with all types of guard doors.

ELECTRICAL	Switching distance	18 mm
	Number of safety outputs	2
	Type of safety output	PNP
	Type of switching output	PNP
	Type of electric connection	Cable
CONSTRUCTION	Construction type housing	Cuboid
	Material housing	Plastic
	IP rating	IP69K
MECHANICAL	With status indication	Yes
ENVIRONMENT	Ambient temperature	-10…55 °C

Published on 11 September 2026

440NZ21SS2JN

Allen-Bradley 440N SensaGuard Rectangular w/Act Mar Ind Mag Hold DC Micro 5

NON-CONTACT INTERLOCKS

DIMENSIONAL DIAGRAM

Figure 1 - Actuator [mm (in.)]

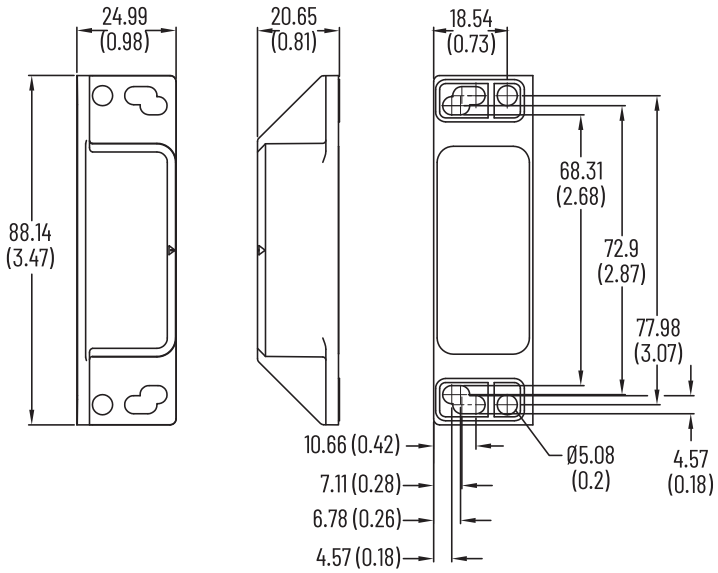

Figure 2 - Sensor Dimensions [mm (in.)]

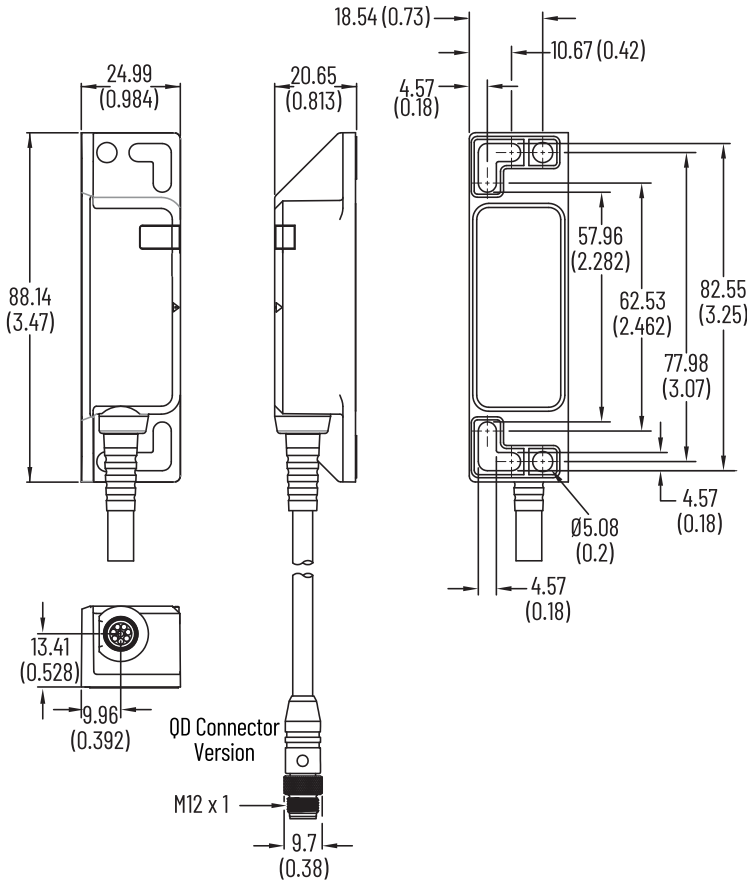

Published on 11 September 2026