# 40529VDC

**Finder 40 Series Miniature Printed Circuit Board Relay 8A 2 Changeover 9V DC Coil**

GENERAL PURPOSE RELAYS




| | |
|---|---|
| **Component type** | Switching relay |
| **Range** | PCB Relay |
| **Model** | N/A |
| **Product status** | Existing |

The Finder PCB Relays feature compact design, versatile functionality and high level performance and flexibility. Applications include electronic circuit boards, interface relays. Direct mounting onto Printed Circuit Boards (PCB's) and interface modules. Available in both AC and DC coils for wide a range of voltages, output current range as well as 1 and 2 contact options.

| | | |
|---|---|---|
| **ELECTRICAL** | Nominal current | 8 A |
| | Nominal voltage AC | 250 V |
| | Max. rated operation voltage Ue AC | 400 V |
| | Number of contacts as change-over contact | 2 |
| | Drive, switching attitude | Mono stable |
| | Rated switching power at AC-1 | 2000 VA |
| | Rated switching power at AC-15, 230V | 750 VA |
| | Breaking capacity at DC-1, 30V | 8 A |
| | Breaking capacity at DC-1, 110V | 0.3 A |
| | Voltage type for actuating | DC |
| | Control supply voltage Us at DC | 9 V |
| | Type of electric connection | Plug-in connection |
| | Electrical life at Un, In (service cycles) | 100000 cycles |
| | Drive, polarization | Polarity free |
| | Type of switch contact | Single contact |
| | Material of contact insert | Thermoplastic |
| **CONSTRUCTION** | Material contact | Silver nickel |
| | Suitable for mounting on PCB | Yes |
| **MECHANICAL** | Mechanical life (service cycles) | 1.0E7 cycles |
| | Max. shock acceleration | 20 g |
| | Max. shock duration | 5 ms |
| | Max. vibration acceleration | 25 m/s² |
| **DIMENSIONS** | Width | 12.4 mm |
| | Height | 29 mm |
| | Depth | 25 mm |
| **ENVIRONMENT** | Operating temperature | -45…85 °C |



Published on 29 October 2026

## DIMENSIONAL DIAGRAM

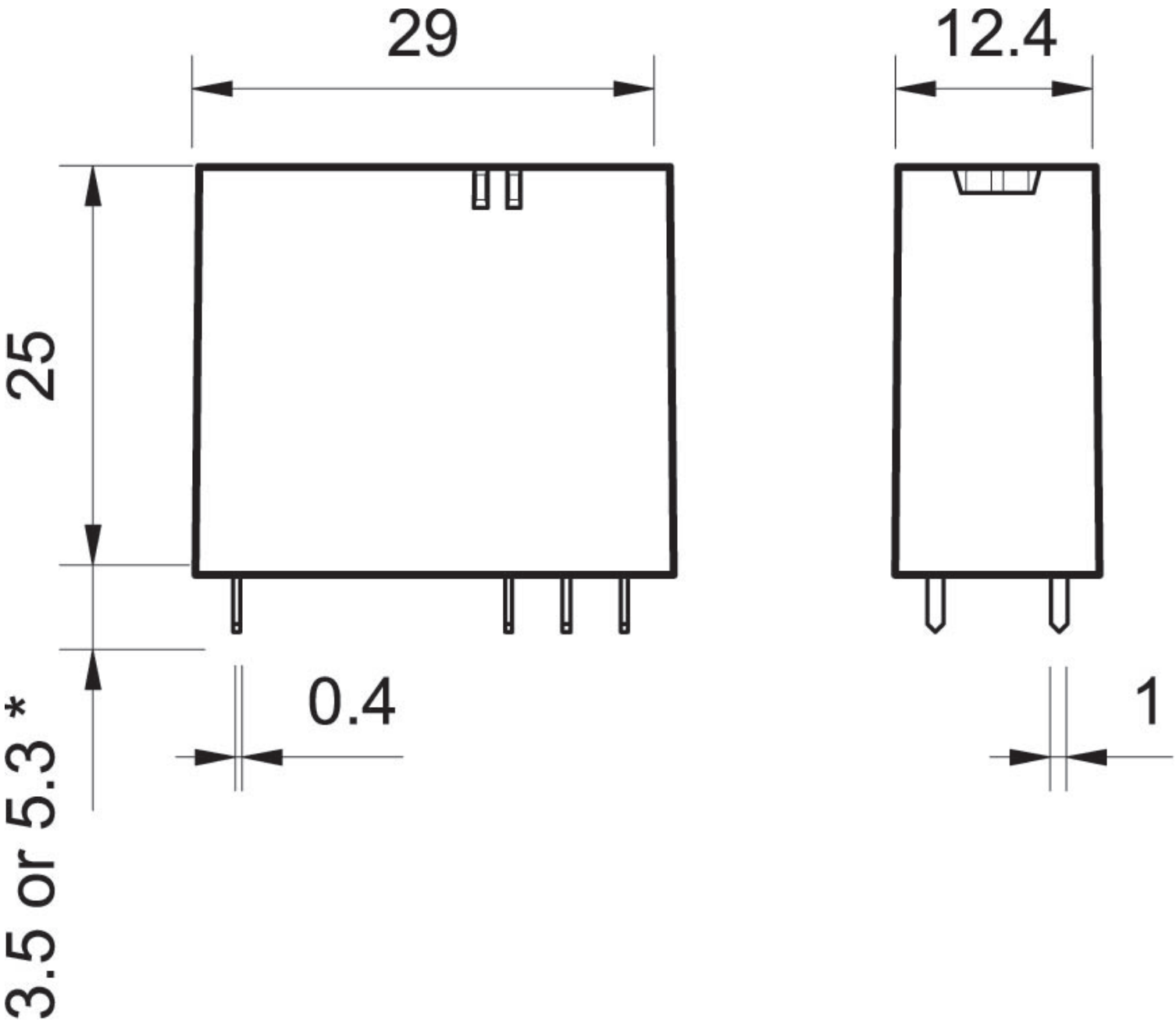


## RELATED PRODUCTS

### ACCESSORY

**Item No:** 09700
**Required:** No
**Description:** Finder 97 Series Card Holder for Push In 94/95/97 Series

**Item No:** 09701
**Required:** No
**Description:** Finder 97 Series Retaining Clip for 9701

## RELATED PRODUCTS

### ACCESSORY

**Item No:** 09758
**Required:** No
**Description:** Finder 97 Series 8 Way Jumper Link for Push In 94/95/97 Series



**Item No:** 863024VACDC
**Required:** No
**Description:** Finder 86 Series Bifunction Timer Module 12 to 24V AC DC

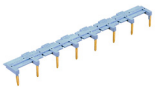

**Item No:** 9508
**Required:** No
**Description:** Finder 90 Series Jumper Link for 9575 and 9585 Bases 8 Way



**Item No:** 9518
**Required:** No
**Description:** Finder 90 Series Jumper Link for 9505 and 9701 9702 Base 8 Way



**Item No:** 99013000
**Required:** No
**Description:** Finder 99 Series Diode Module Standard Polarity 6 to 220V DC



**Item No:** 99013024
**Required:** No
**Description:** Finder 99 Series LED Diode Plug-in Module



**Item No:** 99020024
**Required:** No
**Description:** Finder 99 Series Green LED Module 6 to 24V AC DC



**Item No:** 9902002409
**Required:** No
**Description:** Finder 99 Series RC Module for Relay 6 to 24V AC DC



**Item No:** 9902002498
**Required:** No
**Description:** Finder 99 Series Green LED plus Varistor Module 6 24V AC DC



**Item No:** 99023000
**Required:** No
**Description:** Finder 99 Series Diode Module Standard Polarity 6 to 220V DC



**Item No:** 99029024
**Required:** No
**Description:** Finder 99 Series Green LED plus Diode Module Standard Polarity 6 to 24V DC