405124VAC

Finder 40 Series Miniature Printed Circuit Board Relay 10A 1 Changeover 24V AC Coil

GENERAL PURPOSE RELAYS



Component type	Switching relay
Range	PCB Relay
Model	N/A
Product status	Existing

The Finder PCB Relays feature compact design, versatile functionality and high level performance and flexibility. Applications include electronic circuit boards, interface relays. Direct mounting onto Printed Circuit Boards (PCB's) and interface modules. Available in both AC and DC coils for wide a range of voltages, output current range as well as 1 and 2 contact options.

ELECTRICAL	Nominal current	10 A
	Nominal voltage AC	250 V
	Max. rated operation voltage Ue AC	400 V
	Number of contacts as change-over contact	1
	Drive, switching attitude	Mono stable
	Rated switching power at AC-1	2500 VA
	Rated switching power at AC-15, 230V	500 VA
	Breaking capacity at DC-1, 30V	10 A
	Breaking capacity at DC-1, 110V	0.3 A
	Voltage type for actuating	AC
	Control supply voltage Us at AC 50HZ	24 V
	Control supply voltage Us at AC 60HZ	24 V
	Type of electric connection	Plug-in connection
	Electrical life at Un, In (service cycles)	200000 cycles
	Drive, polarization	Polarity free
	Type of switch contact	Single contact
	Material of contact insert	Thermoplastic
	Operating voltage	19.2-26.4 V
CONSTRUCTION	Material contact	Silver nickel
	Suitable for mounting on PCB	Yes
MECHANICAL	Mechanical life (service cycles)	1.0E7 cycles
	Max. shock acceleration	20 g
	Max. shock duration	5 ms
	Max. vibration acceleration	25 m/s²
DIMENSIONS	Width	12.4 mm
	Height	29 mm

Published on 29 October 2026

405124VAC

Finder 40 Series Miniature Printed Circuit Board Relay 10A 1 Changeover 24V AC Coil

GENERAL PURPOSE RELAYS

DIMENSIONS	Depth	25 mm
ENVIRONMENT	Operating temperature	-40…85 °C

DIMENSIONAL DIAGRAM

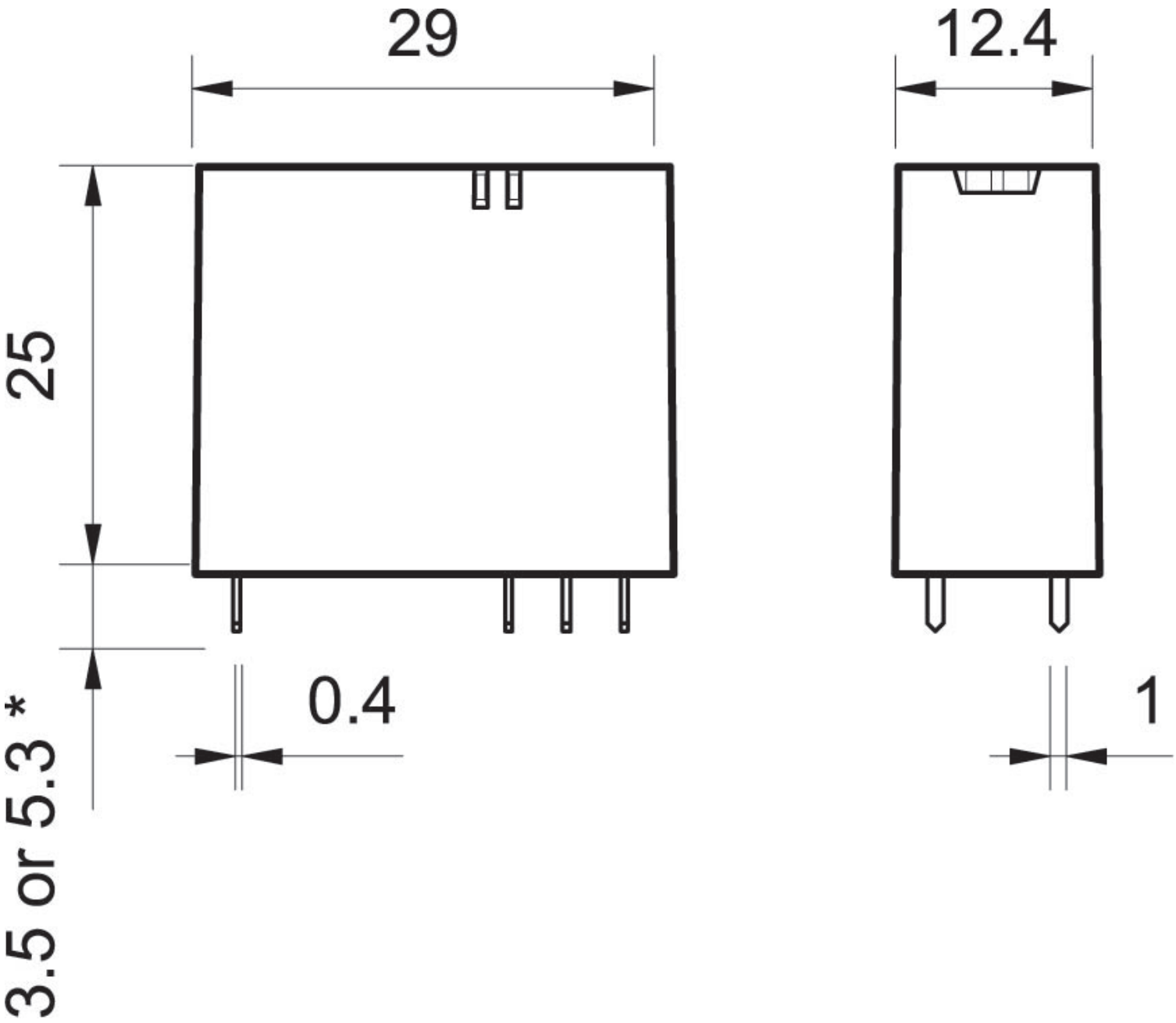

405124VAC

Finder 40 Series Miniature Printed Circuit Board Relay 10A 1 Changeover 24V AC Coil

GENERAL PURPOSE RELAYS

RELATED PRODUCTS

ACCESSORY

Item No: 09700
Required: No
Description: Finder 97 Series Card Holder for Push In 94/95/97 Series

Item No: 09701
Required: No
Description: Finder 97 Series Retaining Clip for 9701

Item No: 09758
Required: No
Description: Finder 97 Series 8 Way Jumper Link for Push In 94/95/97 Series



Item No: 863024VACDC
Required: No
Description: Finder 86 Series Bifunction Timer Module 12 to 24V AC DC

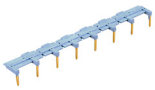

Item No: 9508
Required: No
Description: Finder 90 Series Jumper Link for 9575 and 9585 Bases 8 Way



Item No: 9518
Required: No
Description: Finder 90 Series Jumper Link for 9505 and 9701 9702 Base 8 Way



Item No: 99013000
Required: No
Description: Finder 99 Series Diode Module Standard Polarity 6 to 220V DC



Item No: 99013024
Required: No
Description: Finder 99 Series LED Diode Plug-in Module



Item No: 99020024
Required: No
Description: Finder 99 Series Green LED Module 6 to 24V AC DC



Item No: 9902002409
Required: No
Description: Finder 99 Series RC Module for Relay 6 to 24V AC DC



Item No: 9902002498
Required: No
Description: Finder 99 Series Green LED plus Varistor Module 6 24V AC DC



Item No: 99023000
Required: No
Description: Finder 99 Series Diode Module Standard Polarity 6 to 220V DC



Item No: 99029024
Required: No
Description: Finder 99 Series Green LED plus Diode Module Standard Polarity 6 to 24V DC

Published on 29 October 2026