302212VDC

Finder 30 Series Printed Circuit Board Relay Hermetically Sealed 2 Changeover 12V DC Coil

GENERAL PURPOSE RELAYS

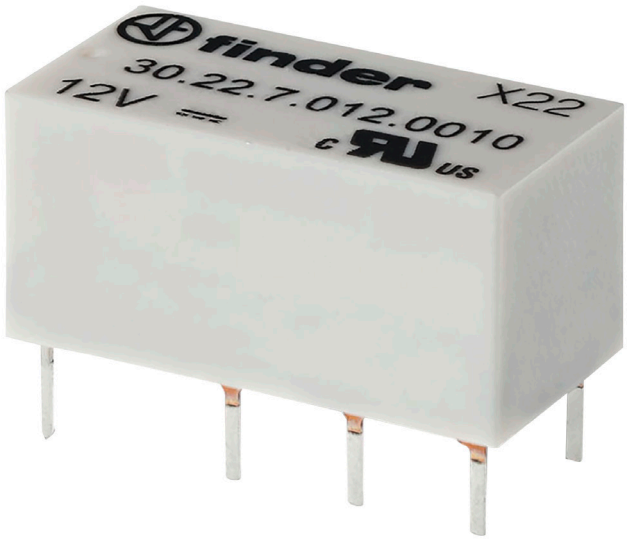

Component type	Switching relay
Range	PCB Relay
Model	N/A
Product status	Existing

The Finder PCB Relays feature compact design, versatile functionality and high level performance and flexibility. Applications include electronic circuit boards, interface relays. Direct mounting onto Printed Circuit Boards (PCB's) and interface modules. Available in both AC and DC coils for wide a range of voltages, output current range as well as 1 and 2 contact options.

ELECTRICAL	Nominal current	2 A
	Nominal voltage AC	125 V
	Max. rated operation voltage Ue AC	250 V
	Number of contacts as change-over contact	2
	Drive, switching attitude	Mono stable
	Rated switching power at AC-1	125 VA
	Rated switching power at AC-15, 230V	25 VA
	Breaking capacity at DC-1, 30V	3 A
	Breaking capacity at DC-1, 110V	0.3 A
	Voltage type for actuating	DC
	Control supply voltage Us at DC	12 V
	Type of electric connection	PCB connection
	Electrical life at Un, In (service cycles)	100000 cycles
	Drive, polarization	Polarity free
	Type of switch contact	Single contact
	Material of contact insert	Thermoplastic
CONSTRUCTION	Material contact	Silver nickel
	Suitable for mounting on PCB	Yes
	Material of contact surface	Gold
MECHANICAL	Mechanical life (service cycles)	1.0E7 cycles
DIMENSIONS	Width	10.1 mm
	Height	20.3 mm
	Depth	11.4 mm
ENVIRONMENT	Operating temperature	-40…85 °C

Published on 29 October 2026

302212VDC

Finder 30 Series Printed Circuit Board Relay Hermetically Sealed 2 Changeover 12V DC Coil

GENERAL PURPOSE RELAYS

DIMENSIONAL DIAGRAM

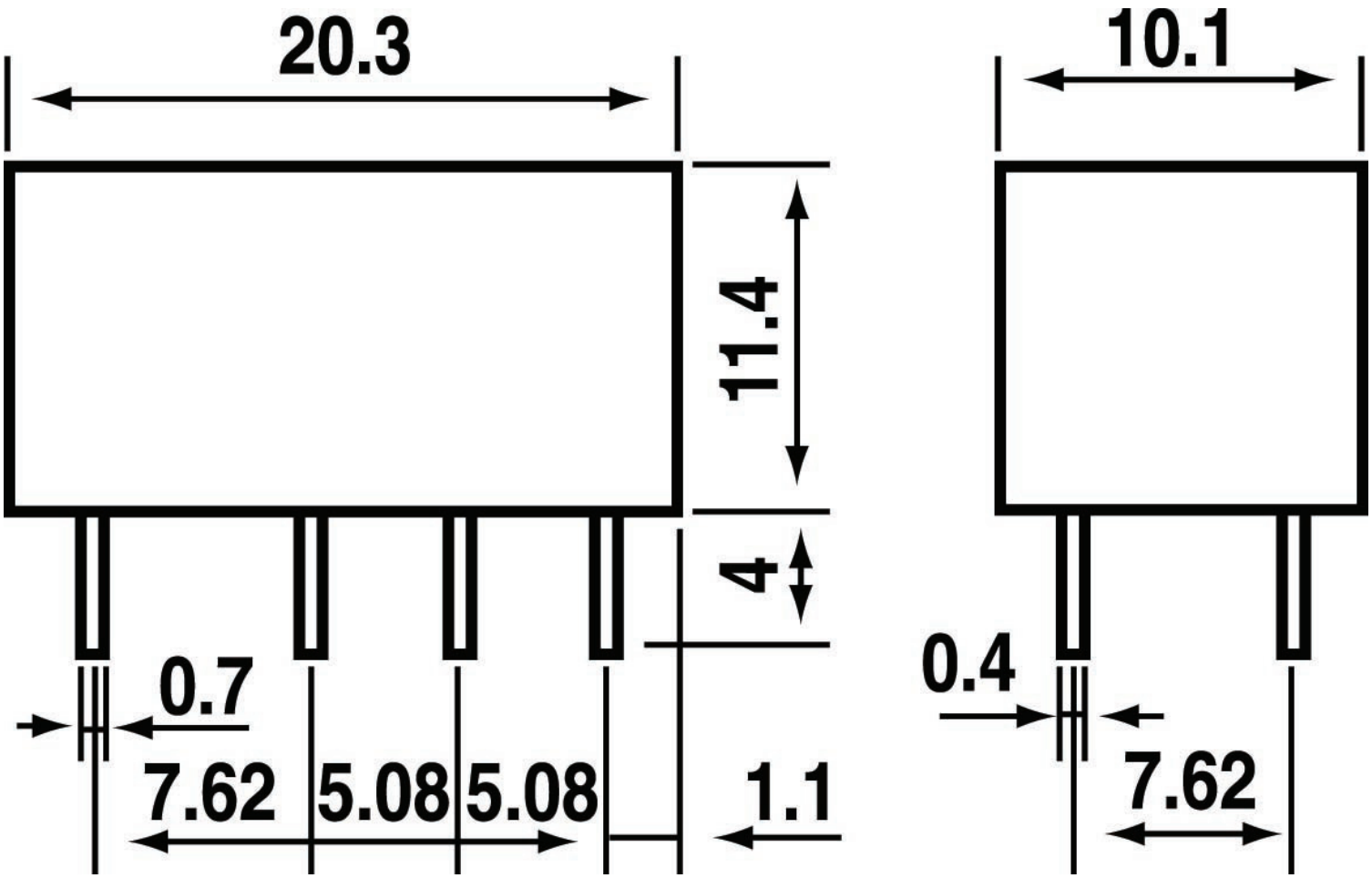

Published on 29 October 2026