2080LC3048QWB

Allen-Bradley Micro830 Controller 28DI 20DO Relay RS232/485 24VDC

MICRO CONTROL SYSTEMS

Allen-Bradley



Component type	PLC CPU-module
Range	Micro 800
Model	830
Alternative	2080L50E48QWB

Allen-Bradley Micro800 controllers offer both a scalable and robust micro control solution for small to large standalone applications and allow for customisation and flexibility. You can elect from a wide range of plug-in modules to match your requirements and make use of Connected Components Workbench™ software to help reduce machine design time and maximise productivity.

ELECTRICAL	Supply voltage DC	20.4-26.4 V
	Voltage type of supply voltage	DC
	With optical interface	No
	Redundancy	No
COMMUNICATION	Number of HW-interfaces USB	1
	Max. number of EtherNet/IP nodes	20
	Can be programmed with Connected Components Workbench	Yes
	Can be programmed with Studio 5000 Logix Designer	No
	Can be programmed with RSLogix 500	No
	Supporting protocol for TCP/IP	No
	Supporting protocol for PROFIBUS	No
	Supporting protocol for CAN	No
	Supporting protocol for INTERBUS	No
	Supporting protocol for ASI	No
	Supporting protocol for KNX	No
	Supporting protocol for Modbus	No
	Supporting protocol for Data-Highway	No
	Supporting protocol for DeviceNet	No
	Supporting protocol for SUCONET	No
	Supporting protocol for LON	No
	Supporting protocol for PROFINET IO	No
	Supporting protocol for PROFINET CBA	No
	Supporting protocol for SERCOS	No
	Supporting protocol for Foundation Fieldbus	No
	Supporting protocol for EtherNet/IP	No

Published on 30 May 2026

2080LC3048QWB

Allen-Bradley Micro830 Controller 28DI 20DO Relay RS232/485 24VDC

MICRO CONTROL SYSTEMS

Allen-Bradley

COMMUNICATION	Supporting protocol for AS-Interface Safety at Work	No
	Supporting protocol for DeviceNet Safety	No
	Supporting protocol for INTERBUS-Safety	No
	Supporting protocol for PROFIsafe	No
	Supporting protocol for SafetyBUS p	No
	Supporting protocol for other bus systems	No
	IO link master	No
CONSTRUCTION	Number of relay outputs	20
	Number of digital inputs	28
	Number of digital outputs	20
	Memory size	0.01 MB
	Additional program memory possible	No
	Suitable for safety functions	No
	Model	Modular
	System accessory	No
	With display	No
	Rail mounting possible	No
	Wall mounting/direct mounting	No
	Front built-in possible	No
	Rack-assembly possible	No
DIMENSIONS	Width	230 mm
	Height	90 mm
	Depth	80 mm

Published on 30 May 2026

DIMENSIONAL DIAGRAM

Micro830 10- and 16-Point Controllers
2080-LC30-10QWB, 2080-LC30-10QVB,
2080-LC30-16AWB, 2080-LC30-16QWB, 2080-LC30-16QVB

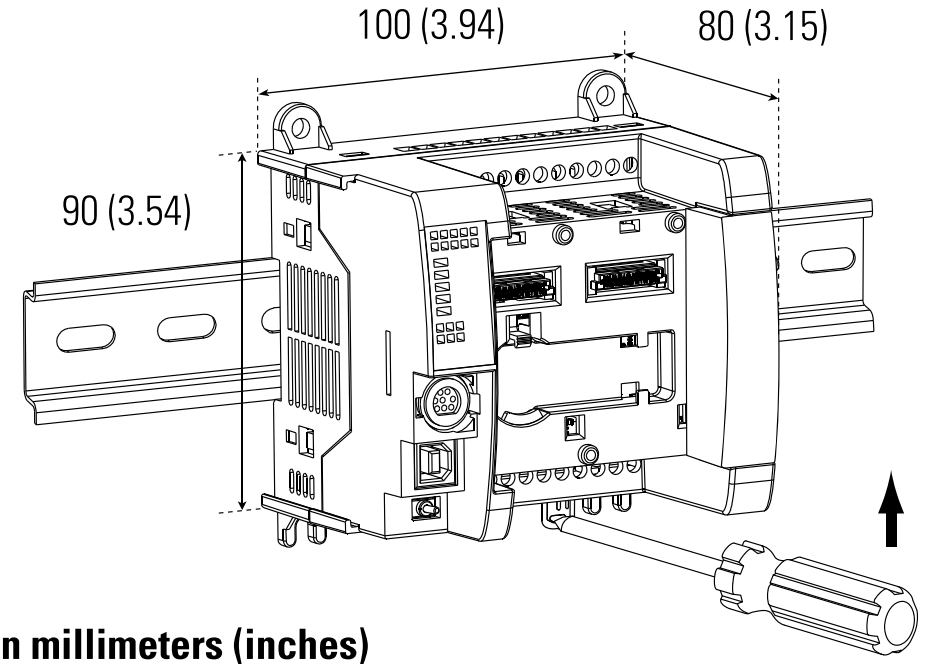

45032

Measurements in millimeters (inches)