202348VAC

Finder 20 Series Modular Step Relay 16A 48V AC Coil 1 Normally Open 1 Normally Closed Contact

GENERAL PURPOSE RELAYS



Component type	Latching relay
Range	Step Relay
Model	N/A
Product status	Existing

The Finder range of high-quality and reliable step relays are the ideal solution to suit various applications. Designed so the step relay coil and contact circuits are electrically isolated and offered with a wide range of switching sequences featuring several contact configurations, rated current, coil voltage and mounting requirements.

ELECTRICAL	**Function**	Mechanical switch
	Number of contacts as normally open contact	1
	Number of contacts as normally closed contact	1
	Number of contacts as change-over contact	0
	Supply voltage	40.8-52.8 V
	Voltage type of supply voltage	AC
	Control voltage 1	- V
	Frequency control voltage 1	- Hz
	Control voltage 2	- V
	Frequency control voltage 2	- Hz
	Rated switch current	16 A
CONSTRUCTION	**Mounting method**	DIN rail
PHOTOMETRIC	**Max. incandescent lamp load**	2000 W
DIMENSIONS	**Width in number of modular spacings**	1

Published on 29 October 2026

202348VAC

Finder 20 Series Modular Step Relay 16A 48V AC Coil 1 Normally Open 1 Normally Closed Contact

GENERAL PURPOSE RELAYS

DIMENSIONAL DIAGRAM

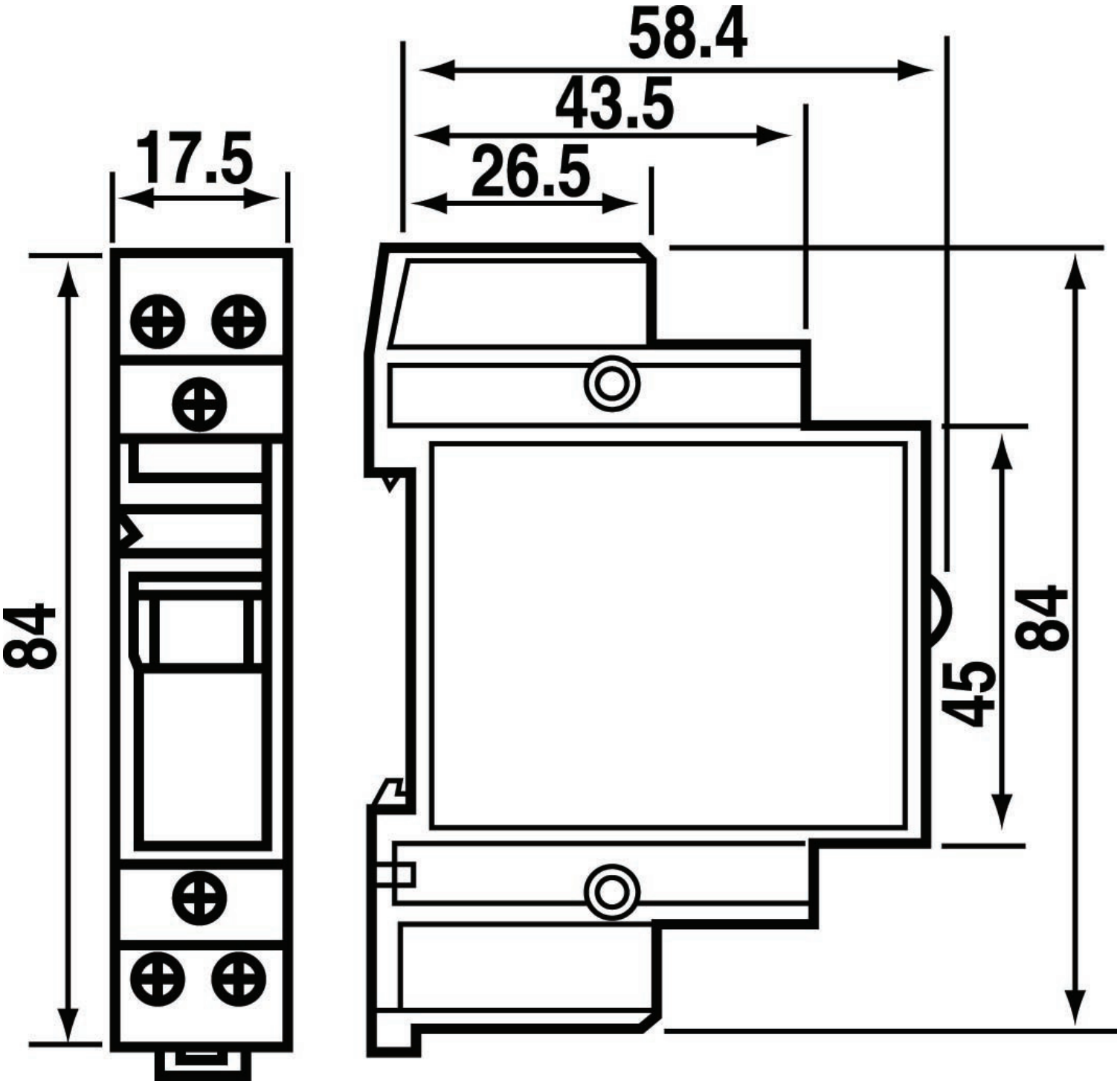

Published on 29 October 2026