1492P4W

Allen-Bradley 1492-P Push-in Terminal 4mm 1 Level 2 Conductor Entries White

TERMINALS

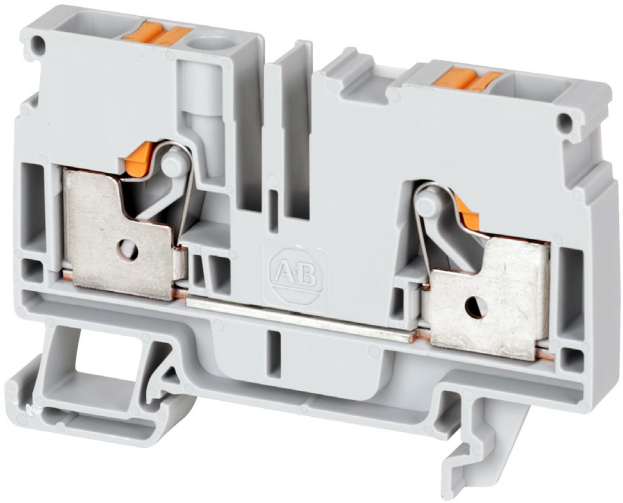

Component type	Feed-through terminal block
Range	1492P
Model	N/A
Product status	Existing

The Allen-Bradley 1492-P range of Push-in Terminal Blocks are reliable, safe and straightforward electrical connections designed for advanced wiring management. With cross-sectional wire sizes from 1.5mm2 to 16mm2 and various terminal types such as feed-through, disconnect, fused and plug-in. Available in single and multi-level housing with a wide range of accessories enabling quick installation.

ELECTRICAL	**Type of electrical connection 1**	Push-in clamp connection
	Rated current In	32 A
	Rated voltage	800 V
CONSTRUCTION	**Colour**	White
	Package quantity	100
	Mounting method	DIN rail (top hat rail) 35 mm
DIMENSIONS	**Wire/conductor size**	0.5-4 mm
	Width	6.1 mm
	Height	60 mm
	Depth	39.5 mm

Published on 13 October 2026

1492P4W

Allen-Bradley 1492-P Push-in Terminal 4mm 1 Level 2 Conductor Entries White

TERMINALS

DIMENSIONAL DIAGRAM

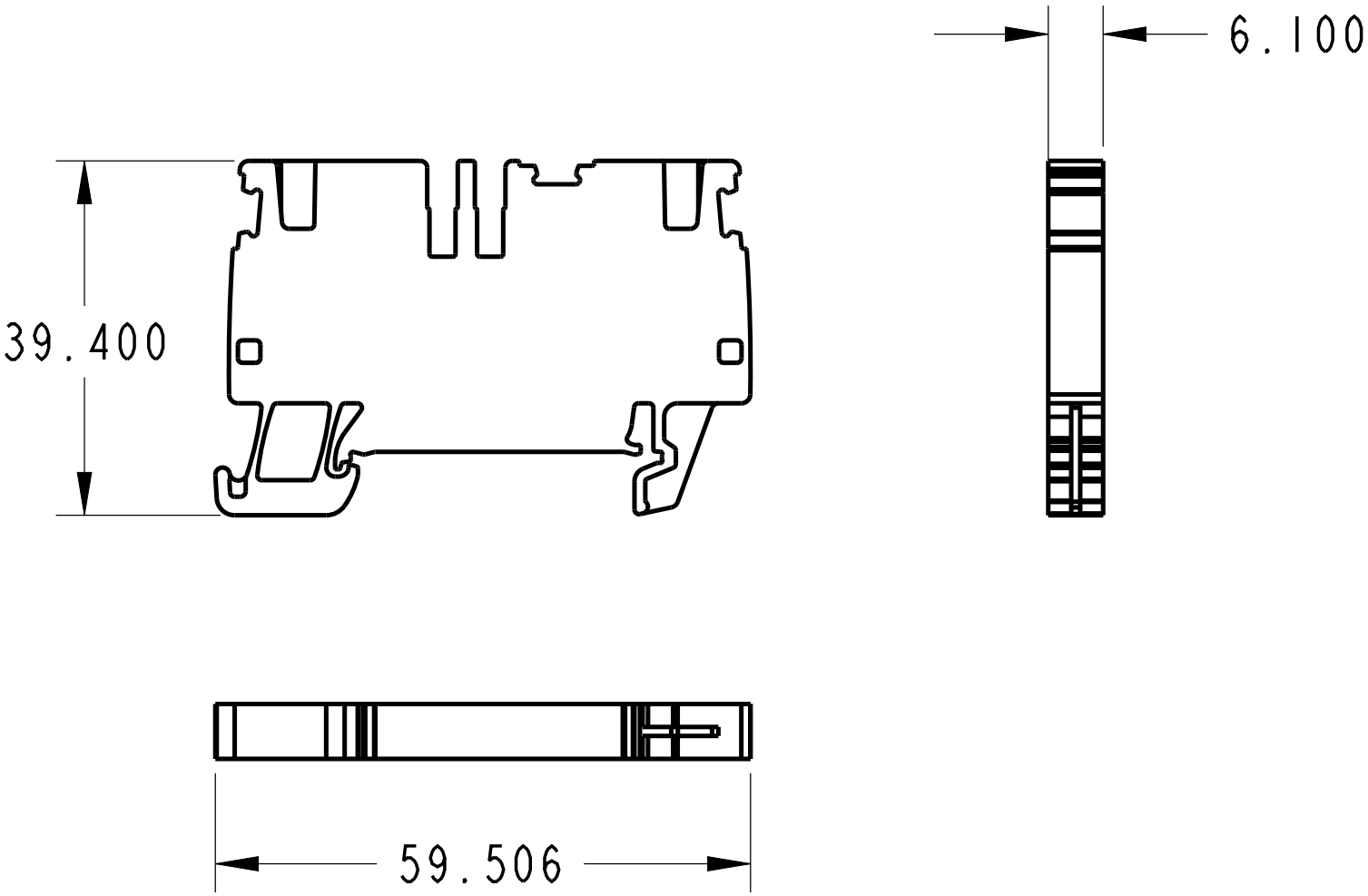

Published on 13 October 2026