140MTC3EB16

Allen-Bradley 140MT Motor Protection Circuit Breaker 1.0 to 1.6A

MOTOR PROTECTION



Component type	Motor protection circuit-breaker
Range	140MT
Model	N/A
Product status	Existing

The Allen-Bradley Bulletin 140MT Motor Protection Circuit Breakers provide magnetic short-circuit and thermal overload protection up to 40A. Assembled starters can be applied without additional branch circuit protection. Motor circuit protectors are applied with a separate overload relay for three-component starters, available in two frame sizes.

ELECTRICAL	**Rated uninterrupted current Iu**	1.6 A
	Switch off technique	Thermomagnetic
	Long time overload protection adjustment range	1-1.6 A
	Max. rated operation voltage Ue	690 V
	Rated short-circuit breaking capacity Icu at 400 V, AC	100 kA
	Rated operation power at AC-3, 400 V	0.55 kW
	Type of control element	Turn handle
	Type of electrical connection of main circuit	Screw connection
	Number of poles	3
CONSTRUCTION	**IP rating**	IP2X
MECHANICAL	**Max. tightening torque**	2.5 Nm
DIMENSIONS	**Height**	96.3 mm
	Width	45 mm
	Depth	83.4 mm
	Weight	0.35 kg

Published on 24 November 2026

140MTC3EB16

Allen-Bradley 140MT Motor Protection Circuit Breaker 1.0 to 1.6A

MOTOR PROTECTION

DIMENSIONAL DIAGRAM

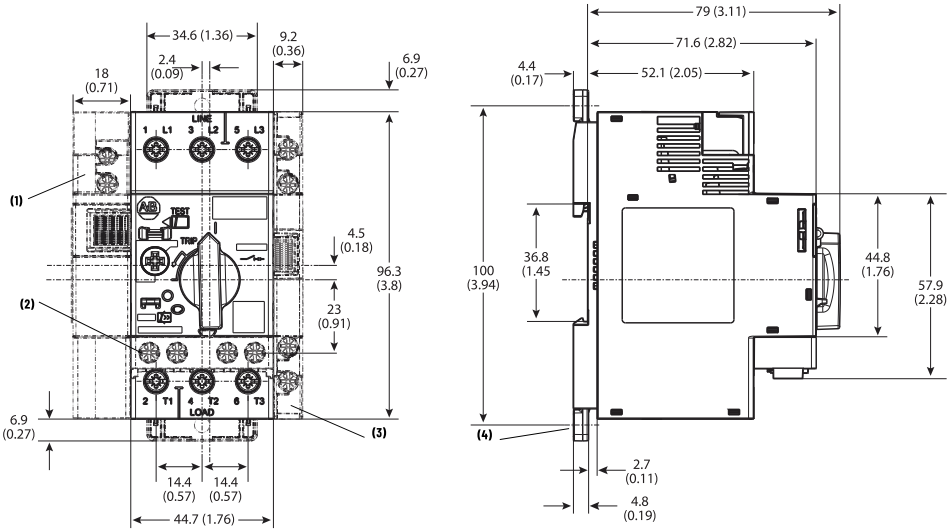

Note	Information
1	Undervoltage/shunt trip
2	Auxiliary contact (front mounted)

Note	Information
3	Auxiliary contact (side mounted)
4	Screw mounting adapter

Published on 24 November 2026

140MTC3EB16

Allen-Bradley 140MT Motor Protection Circuit Breaker 1.0 to 1.6A

MOTOR PROTECTION

RELATED PRODUCTS

ACCESSORY



Item No: 140MCPEC23
Required: No
Description: Allen-Bradley 140M Connecting Link 140MC to 100C 09 to 23



Item No: 140MTCAFA10
Required: No
Description: Allen-Bradley 140MT Auxiliary Contact with 1NO Contact Front Mount



Item No: 140MTCAFA11
Required: No
Description: Allen-Bradley 140MT Auxiliary Contact with 1NO Contact and 1NC Contact Front Mount



Item No: 140MTCAFA20
Required: No
Description: Allen-Bradley 140MT Auxiliary Contact with 2NO Contacts Front Mount



Item No: 140MTCASA02
Required: No
Description: Allen-Bradley 140MT Auxiliary Contact with 2NC Contact Right Hand Side Mount



Item No: 140MTCASA11
Required: No
Description: Allen-Bradley 140MT Auxiliary Contact with 1NO Contact and 1NC Right Hand Side Mount



Item No: 140MTCASA20
Required: No
Description: Allen-Bradley 140MT Auxiliary Contact with 2NO Contacts Right Hand Side Mount

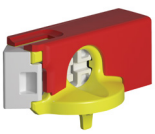

Item No: 140MTCKN
Required: No
Description: Allen-Bradley 140MT Knob Packlockable Black

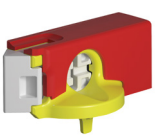

Item No: 140MTCKRY
Required: No
Description: Allen-Bradley 140MT Knob Packlockable Red and Yellow



Item No: 140MTCSNA
Required: No
Description: Allen-Bradley 140MT Shunt Trip 240 to 260V 60Hz



Item No: 140MTCSND
Required: No
Description: Allen-Bradley 140MT Shunt Trip 110V 50Hz



Item No: 140MTCSNF
Required: No
Description: Allen-Bradley 140MT Shunt Trip 220 to 230V 50Hz



Item No: 140MTCSNZJ
Required: No
Description: Allen-Bradley 140MT Shunt Trip Module 24VDC



Item No: 140MTCUXA
Required: No
Description: Allen-Bradley 140MT Undervoltage Trip 240 to 260V 60Hz



Item No: 140MTCUXB
Required: No
Description: Allen-Bradley 140MT Undervoltage Trip 415V 50Hz



Item No: 140MTCUXD
Required: No
Description: Allen-Bradley 140MT Undervoltage Trip 120V 60Hz



Item No: 140MTCW452
Required: No
Description: Allen-Bradley 140MT Busbar 3Pole 64A 2 Starters with Front Mount Auxiliary



Item No: 140MTCW453
Required: No
Description: Allen-Bradley 140MT Busbar 3Pole 64A 3 Starters with Front Mount Auxiliary

Published on 24 November 2026

140MTC3EB16

Allen-Bradley 140MT Motor Protection Circuit Breaker 1.0 to 1.6A

MOTOR PROTECTION

RELATED PRODUCTS

ACCESSORY



Item No: 140MTCW454
Required: No
Description: Allen-Bradley 140MT Busbar 3Pole 64A 4 Starters with Front Mount Auxiliary



Item No: 140MTCW455
Required: No
Description: Allen-Bradley 140MT Busbar 3Pole 64A 5 Starters with Front Mount Auxiliary



Item No: 140MTCW542
Required: No
Description: Allen-Bradley 140MT Busbar 3Pole 64A 2 Starters with Side Mount Auxiliary



Item No: 140MTCW543
Required: No
Description: Allen-Bradley 140MT Busbar 3Pole 64A 3 Starters with Side Mount Auxiliary



Item No: 140MTCW544
Required: No
Description: Allen-Bradley 140MT Busbar 3Pole 64A 4 Starters with Side Mount Auxiliary



Item No: 140MTCW545
Required: No
Description: Allen-Bradley 140MT Busbar 3Pole 64A 5 Starters Side Mount Auxiliary



Item No: 140MTCWBE
Required: No
Description: Allen-Bradley 140MT Busbar Feeder Block

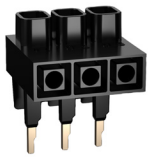

Item No: 140MTCWTEN
Required: No
Description: Allen-Bradley 140MT Busbar Feeder Terminal

Published on 24 November 2026