100E146KY11

Allen-Bradley 100E Contactor 75kW 3Pole 48-130V AC/DC Coil 1NO 1NC Auxiliary

CONTACTORS



Component type	Power contactor, AC switching
Range	100E
Model	N/A
Product status	Existing

The Allen-Bradley 100-E next-generation contactors are available in a range of sizes from 9 to 2650 A, reducing width and weight while maximising panel space. The universal electronic AC/DC coil makes selection easy and offers significant energy savings and direct connection to PLCs for contactors above 100 A.

ELECTRICAL

Voltage type for actuating	AC/DC
Rated control supply voltage Us at AC 50HZ	48-130 V
Rated control supply voltage Us at DC	48-130 V
Rated control supply voltage Us at AC 60HZ	48-130 V

Published on 30 September 2026

100E146KY11

Allen-Bradley 100E Contactor 75kW 3Pole 48-130V AC/DC Coil 1NO 1NC Auxiliary

CONTACTORS

DIMENSIONAL DIAGRAM

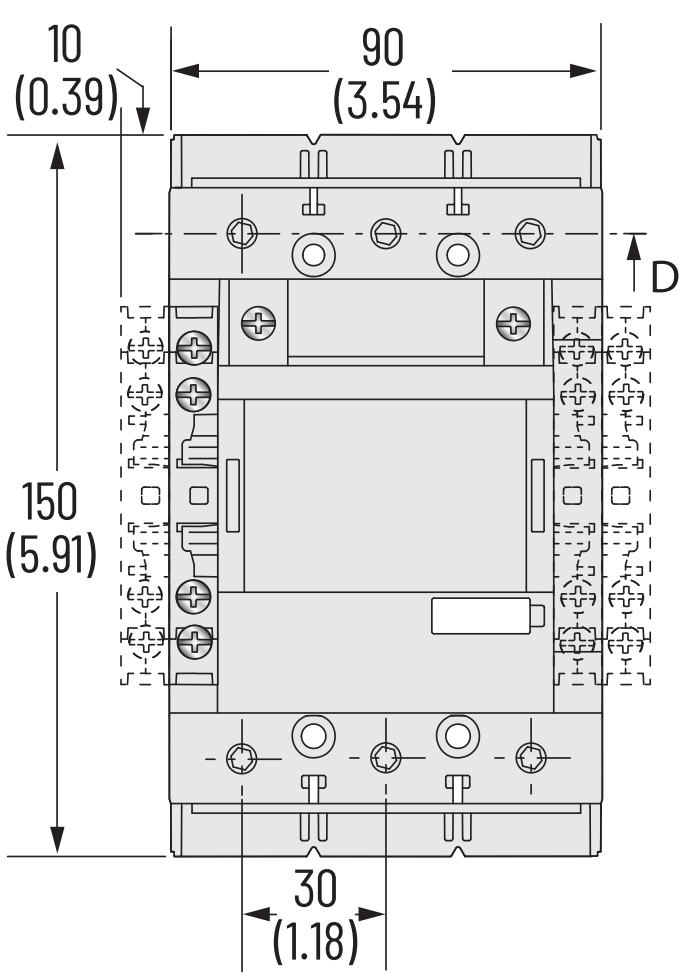

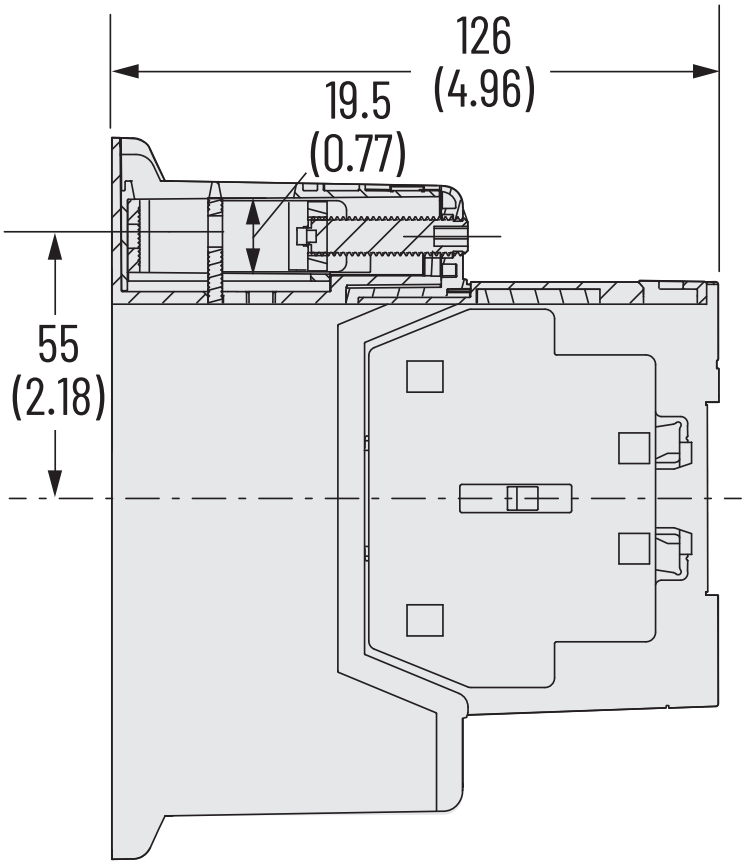

RELATED PRODUCTS

ACCESSORY



Item No: 100ECL146

Required: No

Description: Allen-Bradley 100E Terminal Lug Kit for 100E 116 to 146A



Item No: 100EFA01

Required: No

Description: Allen-Bradley Auxiliary Contact 1NC Front Mount To Suit 100-E09/96



Item No: 100EFA10

Required: No

Description: Allen-Bradley Auxiliary Contact 1NO Front Mount To Suit 100-E09/96



Item No: 100ES111

Required: No

Description: Allen-Bradley 100E Auxiliary Contact with 1NO Contact and 1NC Contact Side Mount Inside Position

Published on 30 September 2026

100E146KY11

Allen-Bradley 100E Contactor 75kW 3Pole 48-130V AC/DC Coil 1NO 1NC Auxiliary

CONTACTORS

RELATED PRODUCTS

ACCESSORY



Item No: 100ES211

Required: No

Description: Allen-Bradley 100E Auxiliary Contact with 1NO Contact and 1NC Contact Side Mount Outside Position