100E116ED11

Allen-Bradley 100E Contactor 55kW 3Pole 100-250VAC/DC EI Coil 1NO 1NC Auxiliary

CONTACTORS



Component type	Power contactor, AC switching
Range	100E
Model	N/A
Product status	Existing

The Allen-Bradley 100-E next-generation contactors are available in a range of sizes from 9 to 2650 A, reducing width and weight while maximising panel space. The universal electronic AC/DC coil makes selection easy and offers significant energy savings and direct connection to PLCs for contactors above 100 A.

ELECTRICAL	Number of normally open contacts as main contact	3
	Number of normally closed contacts as main contact	0
	Rated operation current Ie at AC-3, 400 V	116 A
	Rated operation power at AC-3, 400 V	55 kW
	Rated operation current Ie at AC-1, 400 V	160 A
	Max. rated operation voltage Ue AC	1000 V
	Voltage type for actuating	AC/DC
	Rated control supply voltage Us at AC 50HZ	100-250 V
	Rated control supply voltage Us at DC	100-250 V
	Number of auxiliary contacts as normally open contact	1
	Number of auxiliary contacts as normally closed contact	1
	Rated operation current Ie at AC-3, 690 V	66 A
	Rated operation power at AC-3, 690 V	63 kW
	Rated operation current Ie at AC-3, 1000 V	46 A
	Rated operation power at AC-3, 1000 V	55 kW
	Rated operation power at AC-4, 400 V	45 kW
	Rated control supply voltage Us at AC 60HZ	100-250 V
	Power consumption, AC coil pickup	130 VA
	Power consumption, AC coil hold-in	6 VA
	Power consumption, DC coil pickup	135 W
	Power consumption, DC coil hold-in	5 W
	Type of electrical connection of main circuit	Bolt connection
	Rated operation current Ie at AC-4, 400 V	84 A
CONSTRUCTION	IP rating	IP00

Published on 13 October 2026

100E116ED11

Allen-Bradley 100E Contactor 55kW 3Pole 100-250VAC/DC EI Coil 1NO 1NC Auxiliary

CONTACTORS

CONSTRUCTION	**Mounting method**	Screw mounting
DIMENSIONS	**Height**	150 mm
	Width	90 mm
	Depth	142.5 mm
	Weight	1.75 kg

DIMENSIONAL DIAGRAM

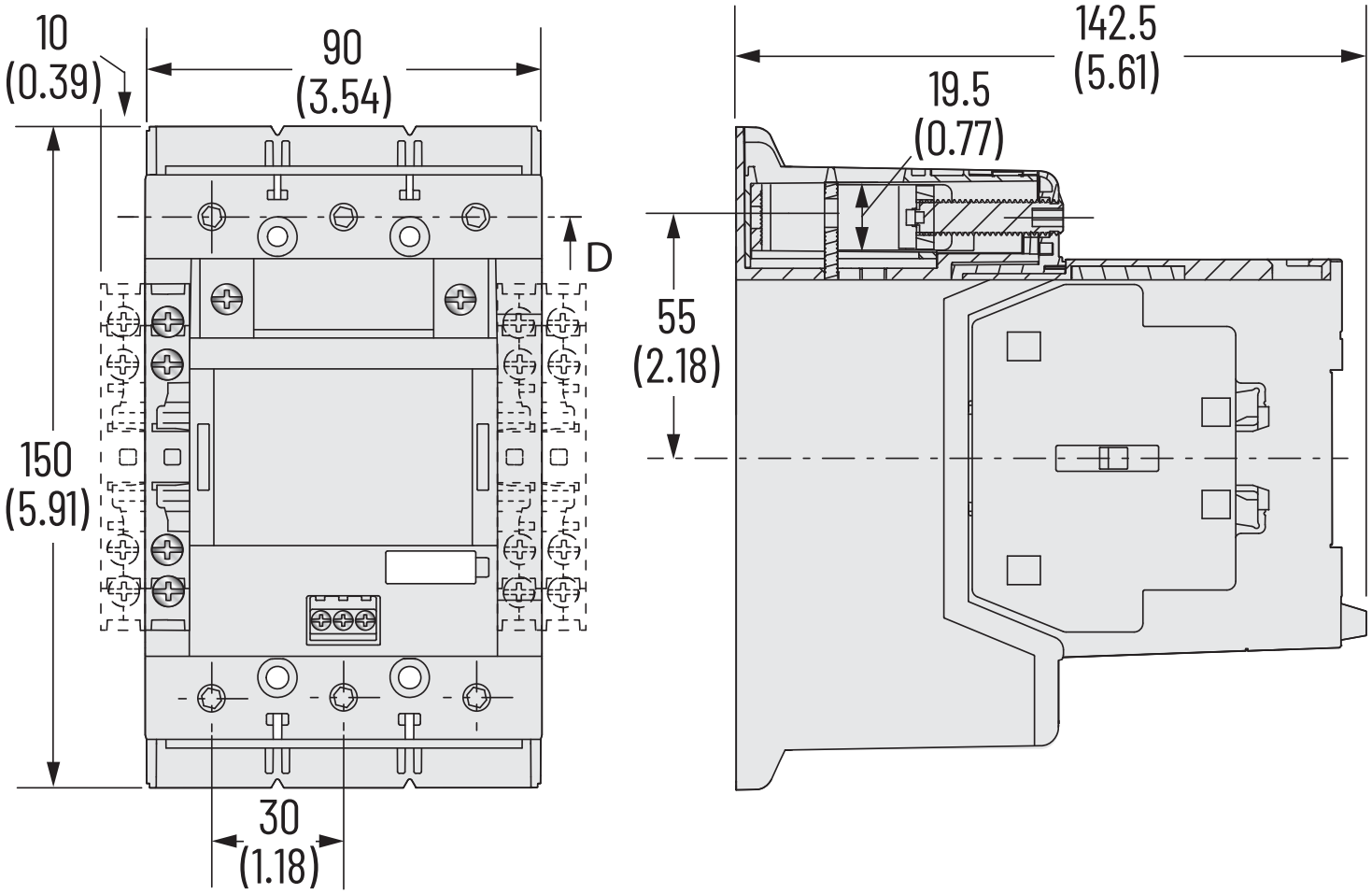

RELATED PRODUCTS

ACCESSORY



Item No: 100ECL146

Required: No

Description: Allen-Bradley 100E Terminal Lug Kit for 100E 116 to 146A



Item No: 100EFA01

Required: No

Description: Allen-Bradley Auxiliary Contact 1NC Front Mount To Suit 100-E09/96

Published on 13 October 2026

100E116ED11

Allen-Bradley 100E Contactor 55kW 3Pole 100-250VAC/DC EI Coil 1NO 1NC Auxiliary

CONTACTORS

RELATED PRODUCTS

ACCESSORY



Item No: 100EFA10

Required: No

Description: Allen-Bradley Auxiliary Contact 1NO Front Mount To Suit 100-E09/96

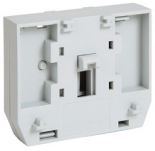

Item No: 100EM100

Required: No

Description: Allen-Bradley 100E Mechanical Interlock



Item No: 100ES111

Required: No

Description: Allen-Bradley 100E Auxiliary Contact with 1NO Contact and 1NC Contact Side Mount Inside Position



Item No: 100ES1B01

Required: No

Description: Allen-Bradley 100E Auxiliary Contact with 1NC Contact Low Power Inside Position Side Mount



Item No: 100ES1B10

Required: No

Description: Allen-Bradley 100E Auxiliary Contact with 1NO Contact Low Power Inside Position



Item No: 100ES211

Required: No

Description: Allen-Bradley 100E Auxiliary Contact with 1NO Contact and 1NC Contact Side Mount Outside Position