# 100C12D10

**Allen-Bradley 100C Contactor 5.5kW 3Pole 110VAC Coil 1NO Contact Auxiliary**

CONTACTORS

NHP Allen-Bradley




| | |
|---|---|
| **Component type** | Power contactor, AC switching |
| **Range** | 100C |
| **Model** | N/A |
| **Product status** | Existing |

The Allen-Bradley 100-C contactor line offers compact, high-performance design in 9 to 97 A contactors. These energy efficient contactors are designed to control motors and other loads. Straightforward wiring and installation process ensure quick and easy setup, reducing downtime and increasing productivity.

| | | |
|---|---|---|
| **ELECTRICAL** | Number of normally open contacts as main contact | 3 |
| | Number of normally closed contacts as main contact | 0 |
| | Rated operation current Ie at AC-3, 400 V | 12 A |
| | Rated operation power at AC-3, 400 V | 5.5 kW |
| | Rated operation current Ie at AC-1, 400 V | 32 A |
| | Max. rated operation voltage Ue AC | 690 V |
| | Voltage type for actuating | AC |
| | Control supply voltage Us at AC 50HZ | 110 V |
| | Number of auxiliary contacts as normally open contact | 1 |
| | Number of auxiliary contacts as normally closed contact | 0 |
| | Rated operation current Ie at AC-3, 690 V | 7 A |
| | Rated operation power at AC-3, 690 V | 5.5 kW |
| | Rated operation power at AC-4, 400 V | 3 kW |
| | Control supply voltage Us at AC 60HZ | 120 V |
| | Power consumption, AC coil pickup | 75 VA |
| | Power consumption, AC coil hold-in | 9.5 VA |
| | Type of electrical connection of main circuit | Screw connection |
| | Rated operation current Ie at AC-4, 400 V | 6.6 A |
| **CONSTRUCTION** | IP rating | IP20 |
| | Mounting method | DIN-rail/screw |
| **DIMENSIONS** | Height | 81 mm |
| | Width | 45 mm |
| | Depth | 86.5 mm |
| | Weight | 0.39 kg |





Published on 29 October 2026

# 100C12D10

**Allen-Bradley 100C Contactor 5.5kW 3Pole 110VAC Coil 1NO Contact Auxiliary**

CONTACTORS

## DIMENSIONAL DIAGRAM

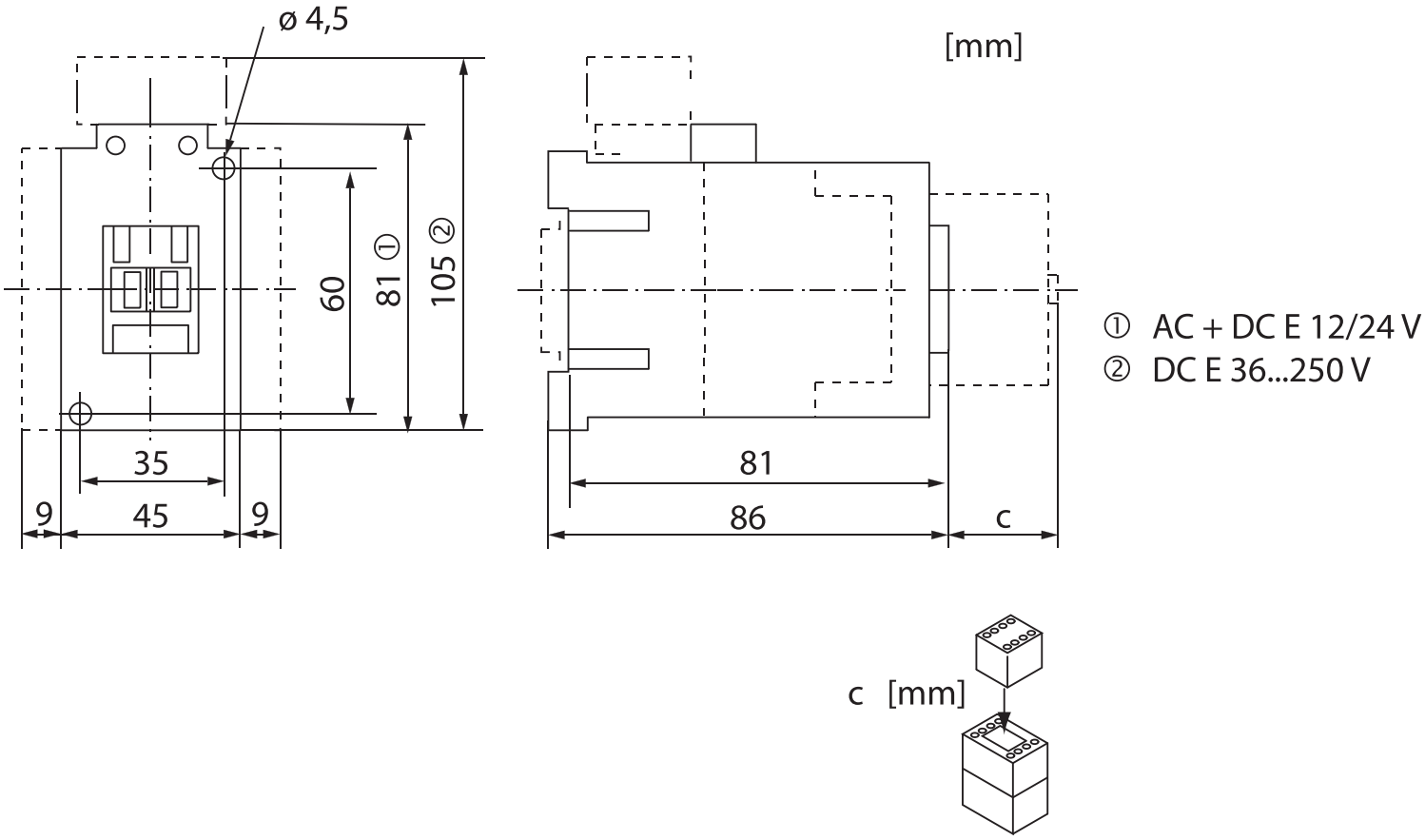


## RELATED PRODUCTS

### ACCESSORY



**Item No:** 140MCPEC23

**Required:** No

**Description:** Allen-Bradley 140M Connecting Link 140MC to 100C 09 to 23





Published on 29 October 2026